101054067

2018

IPMC®

CODE AND COMMENTARY

The complete **IPMC** with corresponding commentary after each section.

ICC
INTERNATIONAL CODE COUNCIL®

101054067

2018

IPMC®

CODE AND COMMENTARY

The complete **IPMC** with corresponding commentary after each section.

INTERNATIONAL CODE COUNCIL®

Copyright © 2018 ICC, ALL RIGHTS RESERVED. Accessed by Jim Davis (JDavis@ShakopeeMN.gov), (City of Shakopee) Order Number #101054067 on Mar 17, 2021 01:42 PM (PDT) pursuant to License Agreement with ICC. No further reproduction, no further reproductions by any third party, or distribution authorized. Single user only, copying and networking prohibited. ANY UNAUTHORIZED REPRODUCTION OR DISTRIBUTION IS A VIOLATION OF THE FEDERAL COPYRIGHT ACT AND THE LICENSE AGREEMENT, AND SUBJECT TO CIVIL AND CRIMINAL PENALTIES THEREUNDER.

101054067

2018 IPMC® Code and Commentary

First Printing: December 2018

ISBN: 978-1-60983-772-3 (soft-cover edition)

COPYRIGHT © 2018
by
INTERNATIONAL CODE COUNCIL, INC.

ALL RIGHTS RESERVED. This 2018 *International Property Maintenance Code*® is a copyrighted work owned by the International Code Council, Inc. ("ICC"). Without advance written permission from the ICC, no part of this book may be reproduced, distributed or transmitted in any form or by any means, including, without limitation, electronic, optical or mechanical means (by way of example, and not limitation, photocopying, or recording by or in an information storage retrieval system). For information on use rights and permissions, please contact: ICC Publications, 4051 Flossmoor Road, Country Club Hills, IL 60478. Phone 1-888-ICC-SAFE (422-7233).

Trademarks: "International Code Council," the "International Code Council" logo, "ICC," the "ICC" logo, "International Property Maintenance Code," "IPMC" and other names and trademarks appearing in this book are registered trademarks of the International Code Council, Inc., and/or its licensors (as applicable), and may not be used without permission.

T023373

PRINTED IN THE USA

INTERNATIONAL CODE COUNCIL®

Copyright © 2018 ICC. ALL RIGHTS RESERVED. Accessed by Jim Davis (JDavis@ShakopeeMN.gov), (City of Shakopee) Order Number #101054067 on Mar 17, 2021 01:42 PM (PDT) pursuant to License Agreement with ICC. No further reproduction, no further reproductions by any third party, or distribution authorized. Single user only, copying and networking prohibited. ANY UNAUTHORIZED REPRODUCTION OR DISTRIBUTION IS A VIOLATION OF THE FEDERAL COPYRIGHT ACT AND THE LICENSE AGREEMENT, AND SUBJECT TO CIVIL AND CRIMINAL PENALTIES THEREUNDER.

101054067

PREFACE

The principal purpose of the Commentary is to provide a basic volume of knowledge and facts relating to existing structures as it pertains to the regulations regarding property maintenance set forth in the 2018 *International Property Maintenance Code*®. The person who is serious about effectively regulating property maintenance will find the Commentary to be a reliable data source and reference to almost all aspects of property maintenance.

As a follow-up to the *International Property Maintenance Code*, we offer a companion document, the 2018 *IPMC® Code and Commentary*. The basic appeal of the Commentary is thus: it provides in a small package and at reasonable cost thorough coverage of many issues likely to be dealt with when using the *International Property Maintenance Code*—then supplements that coverage with historical and technical background. Reference lists, information sources and bibliographies are also included.

Throughout all of this, strenuous effort has been made to keep the vast quantity of material accessible and its method of presentation useful. With a comprehensive yet concise summary of each section, the Commentary provides a convenient reference for property maintenance regulations. In the chapters that follow, discussions focus on the full meaning and implications of the code text. Guidelines suggest the most effective method of application, and the consequences of not adhering to the code text. Illustrations are provided to aid understanding; they do not necessarily illustrate the only methods of achieving code compliance.

The format of the Commentary includes the full text of each section, table and figure in the code, followed immediately by the commentary applicable to that text. As stated in the preface of the 2018 *International Property Maintenance Code*, the content of sections in the code that begin with a letter designation (i.e., [P]502.1) are maintained by another code development committee. Each section's narrative includes a statement of its objective and intent, and usually includes a discussion about why the requirement commands the conditions set forth. Code text and commentary text are easily distinguished from each other. All code text is shown as it appears in the *International Property Maintenance Code*, and all commentary is indented below the code text and begins with the symbol❖.

Readers should note that the Commentary is to be used in conjunction with the *International Property Maintenance Code* and not as a substitute for the code. The Commentary is advisory only; the code official alone possesses the authority and responsibility for interpreting the code.

Comments and recommendations are encouraged, for through your input we can improve future editions. Please direct your comments to the Codes and Standards Development Department at the Chicago District Office.

For the complete errata history of this code, please visit: https://www.iccsafe.org/errata-central/

INTERNATIONAL CODE COUNCIL®
Copyright © 2018 ICC. ALL RIGHTS RESERVED. Accessed by Jim Davis (JDavis@ShakopeeMN.gov), (City of Shakopee) Order Number #101054067 on Mar 17, 2021 01:42 PM (PDT) pursuant to License Agreement with ICC. No further reproduction, no further reproductions by any third party, or distribution authorized. Single user only, copying and networking prohibited. ANY UNAUTHORIZED REPRODUCTION OR DISTRIBUTION IS A VIOLATION OF THE FEDERAL COPYRIGHT ACT AND THE LICENSE AGREEMENT, AND SUBJECT TO CIVIL AND CRIMINAL PENALTIES THEREUNDER.

101054067

INTERNATIONAL CODE COUNCIL®

Copyright © 2018 ICC. ALL RIGHTS RESERVED. Accessed by Jim Davis (JDavis@ShakopeeMN.gov), (City of Shakopee) Order Number #101054067 on Mar 17, 2021 01:42 PM (PDT) pursuant to License Agreement with ICC. No further reproduction, no further reproductions by any third party, or distribution authorized. Single user only, copying and networking prohibited. ANY UNAUTHORIZED REPRODUCTION OR DISTRIBUTION IS A VIOLATION OF THE FEDERAL COPYRIGHT ACT AND THE LICENSE AGREEMENT, AND SUBJECT TO CIVIL AND CRIMINAL PENALTIES THEREUNDER.

101054067

TABLE OF CONTENTS

CHAPTER 1 SCOPE AND ADMINISTRATION . . . . . 1-1 – 1-16

CHAPTER 2 DEFINITIONS . . . . . 2-1 – 2-8

CHAPTER 3 GENERAL REQUIREMENTS . . . . . 3-1 – 3-16

CHAPTER 4 LIGHT, VENTILATION AND OCCUPANCY LIMITATIONS . . . . . 4-1 – 4-14

CHAPTER 5 PLUMBING FACILITIES AND FIXTURE REQUIREMENTS . . . . . 5-1 – 5-10

CHAPTER 6 MECHANICAL AND ELECTRICAL REQUIREMENTS . . . . . 6-1 – 6-10

CHAPTER 7 FIRE SAFETY REQUIREMENTS . . . . . 7-1 – 7-14

CHAPTER 8 REFERENCED STANDARDS . . . . . 8-1 – 8-4

APPENDIX A BOARDING STANDARD . . . . . A-1 – A-2

INDEX . . . . . INDEX-1 – INDEX-12

INTERNATIONAL CODE COUNCIL®

Copyright © 2018 ICC. ALL RIGHTS RESERVED. Accessed by Jim Davis (JDavis@ShakopeeMN.gov), (City of Shakopee) Order Number #101054067 on Mar 17, 2021 01:42 PM (PDT) pursuant to License Agreement with ICC. No further reproduction, no further reproductions by any third party, or distribution authorized. Single user only, copying and networking prohibited. ANY UNAUTHORIZED REPRODUCTION OR DISTRIBUTION IS A VIOLATION OF THE FEDERAL COPYRIGHT ACT AND THE LICENSE AGREEMENT, AND SUBJECT TO CIVIL AND CRIMINAL PENALTIES THEREUNDER.

101054067

INTERNATIONAL CODE COUNCIL®

Copyright © 2018 ICC. ALL RIGHTS RESERVED. Accessed by Jim Davis (JDavis@ShakopeeMN.gov), (City of Shakopee) Order Number #101054067 on Mar 17, 2021 01:42 PM (PDT) pursuant to License Agreement with ICC. No further reproduction, no further reproductions by any third party, or distribution authorized. Single user only, copying and networking prohibited. ANY UNAUTHORIZED REPRODUCTION OR DISTRIBUTION IS A VIOLATION OF THE FEDERAL COPYRIGHT ACT AND THE LICENSE AGREEMENT, AND SUBJECT TO CIVIL AND CRIMINAL PENALTIES THEREUNDER.

101054067

Chapter 1: Scope and Administration

General Comments

The law of building regulation is grounded on the police power of the state. This power is the source of all authority to enact building regulations. In terms of how it is used, police power is the power of the state to legislate for the general welfare of its citizens. This power enables the passage of laws such as a property maintenance code. It is from the police power delegated by the state legislature that local governments are able to enact building regulations. If the state legislature has limited this power in any way, the municipality may not exceed these limitations. While the municipality may not further delegate its police power (e.g., by delegating the burden of determining code compliance to the building owner, contractor or architect), it may turn over the administration of building regulations to a municipal official, such as a code official, provided that he or she is given sufficient criteria to clearly establish the basis for decisions as to whether a proposed building conforms to the code.

Chapter 1 is largely concerned with maintaining "due process of law" in enforcing the provisions contained in the body of the code. Only through careful observation of the administrative provisions can the code official reasonably hope to demonstrate that "equal protection under the law" has been provided. While it is generally assumed that the administrative and enforcement sections of a code are geared toward the responsibilities of the code official, the provisions also establish the rights and privileges of the design professional, contractor and building owner.

Purpose

Chapter 1 establishes the necessary legal basis for enforcement of the code by the authority having jurisdiction. All of the police powers inherent in enforcing minimum standards for the use and maintenance of buildings must follow the line of authority, from the U.S. Constitution to the state to the actual enforcer. Chapter 1 defines the role and responsibilities of the authority having jurisdiction. To protect all parties from an unfair enforcement action, this chapter also sets forth the due process that requires corrective actions to be accomplished in a constitutional manner. Police powers are not unlimited, and this chapter identifies those limitations.

PART 1 — SCOPE AND APPLICATION

SECTION 101 GENERAL

❖ This section sets forth the scope and intent of the code as it applies to existing structures.

[A] 101.1 Title. These regulations shall be known as the *International Property Maintenance Code* of **[NAME OF JURISDICTION]**, hereinafter referred to as "this code."

❖ The purpose of this section is to identify the adopted regulations by inserting the name of the adopting jurisdiction into the code.

[A] 101.2 Scope. The provisions of this code shall apply to all existing residential and nonresidential structures and all existing *premises* and constitute minimum requirements and standards for *premises*, structures, equipment and facilities for light, *ventilation*, space, heating, sanitation, protection from the elements, a reasonable level of safety from fire and other hazards, and for a reasonable level of sanitary maintenance; the responsibility of *owners*, an owner's authorized agent, *operator*s and *occupants*; the *occupancy* of existing structures and *premises*, and for administration, enforcement and penalties.

❖ This section establishes the broad purpose of the code—to protect the public health, safety and welfare in both existing residential and nonresidential structures and on all existing premises.

Four specific areas are addressed in greater detail in subsequent sections:

- Establishing minimum maintenance standards for such elements as basic equipment, light, ventilation, heating, sanitation and fire safety.
- Fixing responsibility among owners, operators and occupants for following the code.
- Regulating the use of existing structures and premises.
- Providing for administration, enforcement and penalties.

These four categories provide communities with the tools to reduce risks created by deteriorated or unsafe buildings and help communities upgrade and maintain other existing structures.

INTERNATIONAL CODE COUNCIL®
Copyright © 2018 ICC. ALL RIGHTS RESERVED. Accessed by Jim Davis (JDavis@ShakopeeMN.gov), (City of Shakopee) Order Number #101054067 on Mar 17, 2021 01:42 PM (PDT) pursuant to License Agreement with ICC. No further reproduction, no further reproductions by any third party, or distribution authorized. Single user only, copying and networking prohibited. ANY UNAUTHORIZED REPRODUCTION OR DISTRIBUTION IS A VIOLATION OF THE FEDERAL COPYRIGHT ACT AND THE LICENSE AGREEMENT, AND SUBJECT TO CIVIL AND CRIMINAL PENALTIES THEREUNDER.

101054067

[A] 101.3 Intent. This code shall be construed to secure its expressed intent, which is to ensure public health, safety and welfare insofar as they are affected by the continued *occupancy* and maintenance of structures and *premises*. Existing structures and *premises* that do not comply with these provisions shall be altered or repaired to provide a minimum level of health and safety as required herein.

❖ The code is intended to provide requirements addressing public health, safety and welfare as they relate to the use and maintenance of existing structures and premises. The code requires existing structures and premises that are not in compliance with the code to be altered or repaired to meet the code. The code requirements are intended to represent the minimum acceptable level of public health and safety. As required in Section 102.3, repairs and alterations must comply with several *International Codes*® (I-Codes®), including the *International Building Code*® (IBC®).

[A] 101.4 Severability. If a section, subsection, sentence, clause or phrase of this code is, for any reason, held to be unconstitutional, such decision shall not affect the validity of the remaining portions of this code.

❖ Only invalid sections of the code (as established by the court of jurisdiction) can be set aside. This is essential to safeguard the application of the code text to situations whereby a provision of the code is declared illegal or unconstitutional. This section preserves the legislative action that put the legal provisions in place.

SECTION 102
APPLICABILITY

❖ This section details how to use the code under various conditions.

[A] 102.1 General. Where there is a conflict between a general requirement and a specific requirement, the specific requirement shall govern. Where differences occur between provisions of this code and the referenced standards, the provisions of this code shall apply. Where, in a specific case, different sections of this code specify different requirements, the most restrictive shall govern.

❖ Specific requirements of the code override or take precedence over general requirements. In cases where the code establishes a specific requirement for a certain condition, that requirement is applicable even if it is less restrictive than a general requirement mentioned elsewhere in the code.

102.2 Maintenance. Equipment, systems, devices and safeguards required by this code or a previous regulation or code under which the structure or *premises* was constructed, altered or repaired shall be maintained in good working order. An *owner*, owner's authorized agent, *operator* or *occupant* shall not cause any service, facility, equipment or utility that is required under this section to be removed from, shut off from or discontinued for any occupied dwelling, except for such temporary interruption as necessary while repairs or alterations are in progress. The requirements of this code are not intended to provide the basis for removal or abrogation of fire protection and safety systems and devices in existing structures. Except as otherwise specified herein, the *owner* or the *owner's* authorized agent shall be responsible for the maintenance of buildings, structures and *premises*.

❖ This section contains general maintenance requirements. The code specifically prohibits the disconnection of any required utilities for an occupied dwelling. This helps to safeguard persons who have a physical condition and are dependent on these systems. Some examples of this include: a person who has to have electricity to power a kidney dialysis machine; a patient who is on an oxygen system full time; and someone with particularly bad allergies who needs to have an air-conditioning system to help filter the air. Any safety system that exists in a building must be maintained. A fire protection or safety system is not to be removed from a building if it is required by the code or a previous regulation or code that was in effect when the building was built. This section also specifies that the owner, the owner's authorized agent, or other person having control of the structure or premises is responsible for maintenance, not the tenants of rental properties.

[A] 102.3 Application of other codes. Repairs, additions or alterations to a structure, or changes of *occupancy*, shall be done in accordance with the procedures and provisions of the *International Building Code, International Existing Building Code, International Energy Conservation Code, International Fire Code, International Fuel Gas Code, International Mechanical Code, International Residential Code, International Plumbing Code* and NFPA 70. Nothing in this code shall be construed to cancel, modify or set aside any provision of the *International Zoning Code*.

❖ Repairs, additions or alterations are to be done as required by the IBC, *International Existing Building Code*® (IEBC®), *International Energy Conservation Code*® (IECC®), *International Fire Code*® (IFC®), *International Fuel Gas Code*® (IFGC®), *International Mechanical Code*® (IMC®), *International Residential Code*® (IRC®) and the *International Plumbing Code*® (IPC®). The *International Property Maintenance Code*® (IPMC®) is not intended to affect any of the requirements in the *International Zoning Code*® (IZC®).

[A] 102.4 Existing remedies. The provisions in this code shall not be construed to abolish or impair existing remedies of the jurisdiction or its officers or agencies relating to the removal or demolition of any structure that is dangerous, unsafe and insanitary.

❖ Section 110 establishes one set of criteria and procedures that may be used to demolish dangerous, unsafe or insanitary buildings. This section permits a jurisdiction to continue to use any remedies already adopted for demolishing buildings. In essence, a

INTERNATIONAL CODE COUNCIL®
Copyright © 2018 ICC. ALL RIGHTS RESERVED. Accessed by Jim Davis (JDavis@ShakopeeMN.gov), (City of Shakopee) Order Number #101054067 on Mar 17, 2021 01:42 PM (PDT) pursuant to License Agreement with ICC. No further reproduction, no further reproductions by any third party, or distribution authorized. Single user only, copying and networking prohibited. ANY UNAUTHORIZED REPRODUCTION OR DISTRIBUTION IS A VIOLATION OF THE FEDERAL COPYRIGHT ACT AND THE LICENSE AGREEMENT, AND SUBJECT TO CIVIL AND CRIMINAL PENALTIES THEREUNDER.

101054067

community may employ several procedures for removing dangerous buildings. It is advisable that one procedure be chosen over another to avoid confusion and errors in processing the demolition.

[A] 102.5 Workmanship. Repairs, maintenance work, alterations or installations that are caused directly or indirectly by the enforcement of this code shall be executed and installed in a *workmanlike* manner and installed in accordance with the manufacturer's instructions.

❖ All repairs, materials, alterations and installations must be executed in a skilled manner that allows the performance intended and anticipated by the code to be achieved, and must meet the criteria of the definition of "Workmanlike" in the code (see the definition of "Workmanlike" in Chapter 2).

Equipment must comply with the manufacturer's installation instructions for proper operation and safety.

[A] 102.6 Historic buildings. The provisions of this code shall not be mandatory for existing buildings or structures designated as historic buildings where such buildings or structures are judged by the *code official* to be safe and in the public interest of health, safety and welfare.

❖ This section provides the code official with the widest flexibility in enforcing the code where the building in question has historic value. This flexibility, however, is not provided without conditions. The most important criterion for application of this section is that the building must be specifically classified as being of historic significance by a qualified party or agent. Usually this is done by a state or local authority after considerable scrutiny of the historic value of the building. Most, if not all, states have such authorities, as do many local jurisdictions. The agencies with such authority typically exist at the state or local government level.

[A] 102.7 Referenced codes and standards. The codes and standards referenced in this code shall be those that are listed in Chapter 8 and considered part of the requirements of this code to the prescribed extent of each such reference and as further regulated in Sections 102.7.1 and 102.7.2.

Exception: Where enforcement of a code provision would violate the conditions of the listing of the equipment or appliance, the conditions of the listing shall apply.

❖ A referenced standard or portion thereof is enforceable to the same extent as if the content of the standard were included in the body of the code. For example, Section 604.2 references NFPA 70 for sizing the electrical main service for a building. The use and application of referenced standards are limited to those portions of the standards that are specifically identified in the code. The code is intended to be in harmony with the referenced standards. If conflicts occur because of scope or purpose, the code text governs. The exception recognizes the rare circumstance of the code requiring or allowing something less restrictive or stringent than the product listing or manufacturer's instructions. If the code conflicts with or deviates from the conditions of the listing, this may or may not mean that the code violated the listing. For example, the listing for an appliance might allow a particular application of an appliance that is expressly prohibited by the code. In this case, the code has not violated the listing, but instead has simply limited the application allowed by the listing. The intent is for the highest level of safety to prevail.

[A] 102.7.1 Conflicts. Where conflicts occur between provisions of this code and the referenced standards, the provisions of this code shall apply.

❖ The use of referenced codes and standards to cover certain aspects of various occupancies and operations, rather than write parallel or competing requirements into the code, is a longstanding code development principle. Often, however, questions and potential conflicts in the use of referenced codes and standards can arise, which can lead to inconsistent enforcement of the code.

[A] 102.7.2 Provisions in referenced codes and standards. Where the extent of the reference to a referenced code or standard includes subject matter that is within the scope of this code, the provisions of this code, as applicable, shall take precedence over the provisions in the referenced code or standard.

❖ Section 102.7.2 expands upon the provisions of Section 102.7.1 by making it clear that, even if a referenced standard references other codes or standards (secondary reference) containing requirements that parallel the code, the provisions of the code will always take precedence. This section provides the policy underpinnings upon which sound code change proposals can be based.

[A] 102.8 Requirements not covered by code. Requirements necessary for the strength, stability or proper operation of an existing fixture, structure or equipment, or for the public safety, health and general welfare, not specifically covered by this code, shall be determined by the *code official*.

❖ Evolving technology in our society will inevitably result in a situation or circumstance in which the code is comparatively silent on an identified hazard. The reasonable application of the code to any hazardous, unforeseen condition is provided for in this section. Clearly such a section and the code official's judicious and reasonable application are needed. The purpose of the section, however, is not to impose requirements that may be preferred over explicit code requirements. Additionally, the section can be utilized to implement the general performance-oriented language of the code to specific enforcement situations.

[A] 102.9 Application of references. References to chapter or section numbers, or to provisions not specifically identified by number, shall be construed to refer to such chapter, section or provision of this code.

❖ In a situation where the code makes reference to a chapter or section number or to another code provi-

INTERNATIONAL CODE COUNCIL®
Copyright © 2018 ICC. ALL RIGHTS RESERVED. Accessed by Jim Davis (JDavis@ShakopeeMN.gov), (City of Shakopee) Order Number #101054067 on Mar 17, 2021 01:42 PM (PDT) pursuant to License Agreement with ICC. No further reproduction, no further reproductions by any third party, or distribution authorized. Single user only, copying and networking prohibited. ANY UNAUTHORIZED REPRODUCTION OR DISTRIBUTION IS A VIOLATION OF THE FEDERAL COPYRIGHT ACT AND THE LICENSE AGREEMENT, AND SUBJECT TO CIVIL AND CRIMINAL PENALTIES THEREUNDER.

101054067

sion without specifically identifying its location in the code, assume that the referenced section, chapter or provision is in the code and not in a referenced code or standard.

[A] 102.10 Other laws. The provisions of this code shall not be deemed to nullify any provisions of local, state or federal law.

❖ In some cases, other laws enacted by the jurisdiction or the state or federal government may be applicable to a condition that is also governed by a requirement in the code. In such circumstances, the requirements of the code are in addition to the other law that is still in effect, although the code official may not be responsible for its enforcement.

PART 2 — ADMINISTRATION AND ENFORCEMENT

SECTION 103
DEPARTMENT OF PROPERTY MAINTENANCE INSPECTION

[A] 103.1 General. The department of property maintenance inspection is hereby created and the executive official in charge thereof shall be known as the *code official*.

❖ The executive official in charge of the property maintenance department is named the "code official" by this section. In actuality, the person who is in charge of the department may hold a different title, such as building commissioner, existing building inspector, housing inspector or construction official. For the purpose of the code, that person is referred to as the "code official."

[A] 103.2 Appointment. The *code official* shall be appointed by the chief appointing authority of the jurisdiction.

❖ This section establishes the code official is appointed and cannot be removed, except for cause subject to a due process review.

[A] 103.3 Deputies. In accordance with the prescribed procedures of this jurisdiction and with the concurrence of the appointing authority, the *code official* shall have the authority to appoint a deputy(s). Such employees shall have powers as delegated by the *code official*.

❖ This section provides the code official with the authority to appoint other individuals to assist with the administration and enforcement of the code. These individuals would have the authority and responsibility as designated by the code official. Such appointments, however, may be exercised only with the authorization of the chief appointing authority.

[A] 103.4 Liability. The *code official,* member of the board of appeals or employee charged with the enforcement of this code, while acting for the jurisdiction, in good faith and without malice in the discharge of the duties required by this code or other pertinent law or ordinance, shall not thereby be rendered civilly or criminally liable personally, and is hereby relieved from all personal liability for any damage accruing to persons or property as a result of an act or by reason of an act or omission in the discharge of official duties.

❖ The code official is not intended to be held liable for those actions performed in accordance with the code in a reasonable and lawful manner. The responsibility of the code official in this regard is subject to local, state and federal laws that may supersede this provision.

[A] 103.4.1 Legal defense. Any suit or criminal complaint instituted against any officer or employee because of an act performed by that officer or employee in the lawful discharge of duties and under the provisions of this code shall be defended by the legal representative of the jurisdiction until the final termination of the proceedings. The code official or any subordinate shall not be liable for costs in an action, suit or proceeding that is instituted in pursuance of the provisions of this code.

❖ This section establishes that code officials or subordinates are not liable for costs in any legal action instituted in response to the performance of lawful duties. These costs are to be borne by the jurisdiction. The best way to be certain that the code official's action is a "lawful duty" is to always cite the applicable code section on which the enforcement action is based.

[A] 103.5 Fees. The fees for activities and services performed by the department in carrying out its responsibilities under this code shall be as indicated in the following schedule.

[JURISDICTION TO INSERT APPROPRIATE SCHEDULE.]

❖ A published fee schedule must be established for permits and inspections. Ideally, the department should generate revenues that cover operating costs and expenses. The permit fee schedule is an integral part of this process.

SECTION 104
DUTIES AND POWERS OF THE CODE OFFICIAL

[A] 104.1 General. The *code official* is hereby authorized and directed to enforce the provisions of this code. The *code official* shall have the authority to render interpretations of this code and to adopt policies and procedures in order to clarify the application of its provisions. Such interpretations, policies and procedures shall be in compliance with the intent and purpose of this code. Such policies and procedures shall not have the effect of waiving requirements specifically provided for in this code.

❖ The duty of the code official is to enforce the code. Because the code official must respond to those who question the requirements of the code related to this responsibility, except as specifically exempted by statutory requirements or elsewhere in the code, he or she is the "authority having jurisdiction" for all matters relating to the code and its enforcement. It is the duty of the code official both to interpret and to determine compliance with the code. Code compliance will not always be easy to determine and will require the judgment and expertise of the code official. In exer-

INTERNATIONAL CODE COUNCIL®
Copyright © 2018 ICC. ALL RIGHTS RESERVED. Accessed by Jim Davis (JDavis@ShakopeeMN.gov), (City of Shakopee) Order Number #101054067 on Mar 17, 2021 01:42 PM (PDT) pursuant to License Agreement with ICC. No further reproduction, no further reproductions by any third party, or distribution authorized. Single user only, copying and networking prohibited. ANY UNAUTHORIZED REPRODUCTION OR DISTRIBUTION IS A VIOLATION OF THE FEDERAL COPYRIGHT ACT AND THE LICENSE AGREEMENT, AND SUBJECT TO CIVIL AND CRIMINAL PENALTIES THEREUNDER.

101054067

cising this authority, however, the code official cannot set aside or ignore any provision of the code.

[A] 104.2 Inspections. The *code official* shall make all of the required inspections, or shall accept reports of inspection by *approved* agencies or individuals. Reports of such inspections shall be in writing and be certified by a responsible officer of such *approved* agency or by the responsible individual. The *code official* is authorized to engage such expert opinion as deemed necessary to report on unusual technical issues that arise, subject to the approval of the appointing authority.

❖ The code official or designee is required to make the necessary inspections to determine compliance with the code, or may accept written reports of inspections by an approved agency. The inspection of work in progress or already accomplished is another significant element in determining code compliance. While a department does not have the resources to inspect every aspect of all work, the required inspections are those that are dictated by administrative rules and procedures based on many parameters, including available inspection resources. In order to expand the available resources, the code official may approve an inspection agency that, in his or her opinion, possesses the proper qualifications to perform the inspections. When unusual or complex technical issues arise relative to inspections, the code official has the authority to seek the opinion and advice of experts. A technical report from an expert requested by the code official can be used to assist in the approval process.

[A] 104.3 Right of entry. Where it is necessary to make an inspection to enforce the provisions of this code, or whenever the *code official* has reasonable cause to believe that there exists in a *structure* or upon a *premises* a condition in violation of this code, the *code official* is authorized to enter the structure or *premises* at reasonable times to inspect or perform the duties imposed by this code, provided that if such *structure* or *premises* is occupied the *code official* shall present credentials to the *occupant* and request entry. If such structure or *premises* is unoccupied, the *code official* shall first make a reasonable effort to locate the *owner*, owner's authorized agent or other person having charge or control of the *structure* or *premises* and request entry. If entry is refused, the *code official* shall have recourse to the remedies provided by law to secure entry.

❖ This section establishes the right of the code official to enter the premises in order to make the inspections required by Section 104.3. The right to enter structures or premises is limited. First, to protect the right of privacy, the owner or occupant must grant the code official permission before an interior inspection of the property can be conducted. Permission is not required for inspections that can be accomplished from within the public right-of-way. Second, such access may be denied by the owner or occupant. Unless the inspector has reasonable cause to believe that a code violation exists, access may be unattainable.

Searches of a private residence to gather information for the purpose of enforcing codes, ordinances or regulations are considered unreasonable and are prohibited by the Fourth Amendment to the US Constitution. "Reasonable cause" in the context of this section must be distinguished from "probable cause," which is required to gain access to property in criminal cases. The burden of proof establishing reasonable cause may vary among jurisdictions. Usually, an inspector must show that the property is subject to inspection under the provisions of the code; that the interests of the public health, safety and welfare outweigh the individual's right to maintain privacy; and that such an inspection is required solely to determine compliance with the provisions of the code.

Many jurisdictions do not recognize the concept of an administrative warrant and may require the code official to prove probable or reasonable cause in order to gain access upon refusal. This burden of proof is usually more substantial, often requiring the code official to stipulate in advance why access is needed (usually access is restricted to gathering evidence for seeking an indictment or making an arrest); what specific items or pieces of information are sought; its relevance to the case against the individual subject; how knowledge of the relevance of the information or items sought was obtained; and how the evidence sought will be used. In all such cases, the right to privacy must always be weighed against the right of the code official to conduct an inspection to verify that the public health, safety and welfare are not in jeopardy. Such important and complex constitutional issues should be discussed with the jurisdiction's legal counsel. Jurisdictions should establish procedures for securing the necessary court orders when an inspection is deemed necessary following a refusal.

Third, code officials must present proper identification (see commentary, Section 104.4) and request admittance during reasonable hours—usually the normal business hours of the establishment—to be admitted. Fourth, inspections must be aimed at securing or determining compliance with the provisions and intent of the regulations that are specifically within the established scope of the code official's authority.

[A] 104.4 Identification. The *code official* shall carry proper identification when inspecting *structure*s or *premises* in the performance of duties under this code.

❖ This section requires the code official (including by definition all authorized representatives) to carry identification in the course of conducting the duties of the position. The identification removes any question as to the purpose and authority of the inspector.

[A] 104.5 Notices and orders. The *code official* shall issue all necessary notices or orders to ensure compliance with this code.

❖ An important element of code enforcement is the necessary advisement of deficiencies, which is accomplished through notices and orders. The code official is required to issue orders to abate illegal or unsafe conditions. Section 107 contains additional information for these notices.

INTERNATIONAL CODE COUNCIL®
Copyright © 2018 ICC. ALL RIGHTS RESERVED. Accessed by Jim Davis (JDavis@ShakopeeMN.gov), (City of Shakopee) Order Number #101054067 on Mar 17, 2021 01:42 PM (PDT) pursuant to License Agreement with ICC. No further reproduction, no further reproductions by any third party, or distribution authorized. Single user only, copying and networking prohibited. ANY UNAUTHORIZED REPRODUCTION OR DISTRIBUTION IS A VIOLATION OF THE FEDERAL COPYRIGHT ACT AND THE LICENSE AGREEMENT, AND SUBJECT TO CIVIL AND CRIMINAL PENALTIES THEREUNDER.

101054067

[A] 104.6 Department records. The *code official* shall keep official records of all business and activities of the department specified in the provisions of this code. Such records shall be retained in the official records for the period required for retention of public records.

❖ In keeping with the need for efficient business practices, the code official must keep official records pertaining to fees collected, inspections, notices and orders issued. Such documentation provides a valuable source of information if questions arise throughout the life of the building and its occupancy regarding outstanding preexisting code violations or conditions.

SECTION 105
APPROVAL

[A] 105.1 Modifications. Whenever there are practical difficulties involved in carrying out the provisions of this code, the *code official* shall have the authority to grant modifications for individual cases upon application of the *owner* or *owner's* authorized agent, provided that the *code official* shall first find that special individual reason makes the strict letter of this code impractical, the modification is in compliance with the intent and purpose of this code and that such modification does not lessen health, life and fire safety requirements. The details of action granting modifications shall be recorded and entered in the department files.

❖ The code official may amend or make exceptions to the code as needed where strict compliance is impractical. Only the code official has the authority to grant modifications. Consideration of a particular difficulty is to be based on the application of the owner and a demonstration that the intent of the code is accomplished. This section is not intended to permit setting aside or ignoring a code provision; rather, it is intended to provide for the acceptance of equivalent protection. For example, a code official might decide to accept the installation of a sprinkler system throughout the building instead of upgrading certain walls to have a fire-resistance rating. The modification of requirements would be based on the equivalent protection of the sprinkler system to the upgraded walls. Such modifications do not, however, extend to actions that are necessary to correct violations of the code. In other words, a code violation or the expense of correcting one cannot constitute a practical difficulty.

Filing the details of a modification action is necessary if the reasons for the modification are subject to review. Comprehensive written records are an essential part of an effective administrative system. Unless clearly written records of the considerations and documentation utilized in the modification process are created and maintained, subsequent enforcement action will be difficult to support and will be inconsistent.

[A] 105.2 Alternative materials, design and methods of construction and equipment. The provisions of this code are not intended to prevent the installation of any material or to prohibit any design or method of construction not specifically prescribed by this code, provided that any such alternative has been *approved*. An alternative material, design or method of construction shall be *approved* where the *code official* finds that the proposed design is satisfactory and complies with the intent of the provisions of this code, and that the material, method or work offered is, for the purpose intended, not less than the equivalent of that prescribed in this code in quality, strength, effectiveness, fire resistance, durability and safety. Where the alternative material, design or method of construction is not *approved*, the *code official* shall respond in writing, stating the reasons why the alternative was not *approved*.

❖ The code is not intended to inhibit innovative ideas or technological advances. A comprehensive regulatory document cannot envision and then address all future innovations in the industry. As a result, the code must be applicable to and provide a basis for the approval of an increasing number of newly developed, innovative materials, designs, systems and methods for which no code text or referenced standards yet exist. The fact that a material, product or method of construction is not specifically described in the code is not an indication that its use is intended to be prohibited. The code official is expected to apply sound technical judgment in accepting materials, systems or methods that, while not anticipated by the drafters of the current code text, can be demonstrated to offer equivalent performance. The code official is responsible for determining if a requested alternative provides the equivalent level of protection of the public health, safety and welfare, as required by the code. When the code official determines the alternate material, design, method of construction or equipment is not at least equivalent to what the code prescribes for safety, durability, fire-resistance, etc., the code official is required to provide a written response to the submitter.

[A] 105.3 Required testing. Whenever there is insufficient evidence of compliance with the provisions of this code or evidence that a material or method does not conform to the requirements of this code, or in order to substantiate claims for alternative materials or methods, the *code official* shall have the authority to require tests to be made as evidence of compliance without expense to the jurisdiction.

❖ To provide the basis on which the code official can make a decision regarding an alternative material or type of equipment, sufficient technical data, test reports and documentation must be provided for evaluation by the code official. If evidence satisfactory to the code official proves that the alternative equipment, material or construction method is equivalent to that required by the code, he or she is obligated to approve it. Any such approval cannot have the effect of waiving any requirements of the code. The burden of proof of equivalence lies with the applicant who proposes the use of alternative equipment, materials or methods.

INTERNATIONAL CODE COUNCIL®
Copyright © 2018 ICC. ALL RIGHTS RESERVED. Accessed by Jim Davis (JDavis@ShakopeeMN.gov), (City of Shakopee) Order Number #101054067 on Mar 17, 2021 01:42 PM (PDT) pursuant to License Agreement with ICC. No further reproduction, no further reproductions by any third party, or distribution authorized. Single user only, copying and networking prohibited. ANY UNAUTHORIZED REPRODUCTION OR DISTRIBUTION IS A VIOLATION OF THE FEDERAL COPYRIGHT ACT AND THE LICENSE AGREEMENT, AND SUBJECT TO CIVIL AND CRIMINAL PENALTIES THEREUNDER.

101054067

[A] 105.3.1 Test methods. Test methods shall be as specified in this code or by other recognized test standards. In the absence of recognized and accepted test methods, the *code official* shall be permitted to approve appropriate testing procedures performed by an *approved* agency.

❖ The code official must require the submission of any appropriate information and data to assist in the determination of equivalency. This information must be submitted before a permit will be issued. The type of information required includes test data in accordance with the referenced standards, evidence of compliance with the referenced standard specifications and design calculations. If no test standard is available, the owner or owner's agent is to propose the test procedures and submit them to the code official for review and approval. For example, ICC Evaluation Service (ICC-ES) has issued evaluation reports that would be particularly useful in providing the code official with the technical basis for evaluation and approval of new and innovative plumbing materials and components. The use of such authoritative and credible research reports can greatly assist the code official by reducing the time-consuming engineering analysis necessary to review materials and products. Failure to adequately substantiate a request for the use of an alternative is a valid reason for the code official to deny a request.

[A] 105.3.2 Test reports. Reports of tests shall be retained by the *code official* for the period required for retention of public records.

❖ The testing agency must be approved by the code official. The testing agency should have technical expertise, test equipment and quality assurance to properly conduct and report the necessary testing.

[A] 105.4 Used material and equipment. Materials that are reused shall comply with the requirements of this code for new materials. Materials, equipment and devices shall not be reused unless such elements are in good repair or have been reconditioned and tested where necessary, placed in good and proper working condition and *approved* by the *code official*.

❖ The code criteria for materials and equipment have changed over the years. Evaluation of testing and materials technology has facilitated the development of new criteria that old materials may not satisfy. As a result, used materials are required to be evaluated in the same manner as new materials. Used (previously installed) equipment must be equivalent to that required by the code if it is to be used again in a new installation.

[A] 105.5 Approved materials and equipment. Materials, equipment and devices *approved* by the *code official* shall be constructed and installed in accordance with such approval.

❖ The code is a compilation of criteria with which materials, equipment, devices and systems must comply to be suitable for a particular application. The code official has a duty to evaluate such materials, equipment, devices and systems for code compliance and, when compliance is determined, approve the same for use. The materials, equipment, devices and systems must be constructed and installed in compliance with, and all conditions and limitations considered as a basis for, that approval. For example, the manufacturer's instructions and recommendations are to be followed if the approval of the material was based even in part on those instructions and recommendations. The approval authority given to the code official is a significant responsibility and is a key to code compliance. The approval process is first technical and then administrative and must be approached as such. For example, if data to determine code compliance is required, such data should be in the form of test reports or engineering analysis and not simply taken from a sales brochure.

[A] 105.6 Research reports. Supporting data, where necessary to assist in the approval of materials or assemblies not specifically provided for in this code, shall consist of valid research reports from *approved* sources.

❖ When an alternative material or method is proposed for construction, it is incumbent on the code official to determine whether this alternative is, in fact, an equivalent to the methods prescribed by the code. Reports providing evidence of this equivalency are required to be supplied by an approved source, meaning a source that the code official finds to be reliable and accurate. The ICC-ES is an example of an agency that provides research reports for alternative materials and methods.

SECTION 106
VIOLATIONS

[A] 106.1 Unlawful acts. It shall be unlawful for a person, firm or corporation to be in conflict with or in violation of any of the provisions of this code.

❖ Violations of the code are prohibited. This is the basis for all citations and correction notices with regard to code violations.

[A] 106.2 Notice of violation. The *code official* shall serve a notice of violation or order in accordance with Section 107.

❖ The code official is required to notify the person responsible for violating the code. The section that is allegedly being violated must be cited so that the responsible party can respond to the notice.

[A] 106.3 Prosecution of violation. Any person failing to comply with a notice of violation or order served in accordance with Section 107 shall be deemed guilty of a misdemeanor or civil infraction as determined by the local municipality, and the violation shall be deemed a *strict liability offense*. If the notice of violation is not complied with, the *code official* shall institute the appropriate proceeding at law or in equity to restrain, correct or abate such violation, or to require the removal or termination of the unlawful *occupancy* of the structure in violation of the provisions of this code or of the order or direction made pursuant thereto. Any action

INTERNATIONAL CODE COUNCIL®
Copyright © 2018 ICC. ALL RIGHTS RESERVED. Accessed by Jim Davis (JDavis@ShakopeeMN.gov), (City of Shakopee) Order Number #101054067 on Mar 17, 2021 01:42 PM (PDT) pursuant to License Agreement with ICC. No further reproduction, no further reproductions by any third party, or distribution authorized. Single user only, copying and networking prohibited. ANY UNAUTHORIZED REPRODUCTION OR DISTRIBUTION IS A VIOLATION OF THE FEDERAL COPYRIGHT ACT AND THE LICENSE AGREEMENT, AND SUBJECT TO CIVIL AND CRIMINAL PENALTIES THEREUNDER.

101054067

taken by the authority having jurisdiction on such *premises* shall be charged against the real estate upon which the structure is located and shall be a lien upon such real estate.

❖ This section classifies a violation as a "strict liability offense," which is defined in Section 202; thus, it is not required to prove that the person intended to violate the code or was negligent in doing so. All that is required for conviction is that the notice of violation for correction was properly served and that the person failed to comply. This aids jurisdictions in prosecuting code violators.

The code official must pursue, through the use of legal counsel of the jurisdiction, legal means to correct the violation.

Any extensions of time for the violations to be voluntarily corrected must be for a reasonable, bona fide cause or the code official may be subject to criticism for "arbitrary and capricious" actions. In general, it is better to have a standard time limitation for correction of violations. Departures from this standard must be for a clear and reasonable purpose, usually stated in writing by the violator. The code provides a mechanism for the municipality to recover costs expended on a property through placing a lien on the property. For example, if an unimproved lot had to be mown throughout the summer growing season, the cost of the mowing could be recovered through a lien on the property.

[A] 106.4 Violation penalties. Any person who shall violate a provision of this code, or fail to comply therewith, or with any of the requirements thereof, shall be prosecuted within the limits provided by state or local laws. Each day that a violation continues after due notice has been served shall be deemed a separate offense.

❖ An adopting jurisdiction is permitted to assess penalties for violations of the code. The penalties include monetary fines, as well as possible imprisonment. The severity of the fine or penalty is left for the jurisdiction to establish. The local jurisdiction, through its council and attorney or other administrative authority, will normally designate the range for the dollar amount of fines; however, the judge will determine the actual fine. This encourages support and agreement from all parties when enforcement action is taken. Fines should be large enough to discourage noncompliance with the code, but not so large as to be inappropriate for the violation being charged.

Each day a violation continues unabated after proper notice has been served is to be deemed a separate offense and may be charged as such. In general, it is better to cite violations daily. This action may expedite a court hearing or cause the owner to correct the violations rather than risk exorbitant fines or imprisonment. Whether to cite violations on a daily basis is a policy decision and should be made in cooperation with the attorney who will prosecute the cases.

[A] 106.5 Abatement of violation. The imposition of the penalties herein prescribed shall not preclude the legal officer of the jurisdiction from instituting appropriate action to restrain, correct or abate a violation, or to prevent illegal *occupancy* of a building, structure or *premises*, or to stop an illegal act, conduct, business or utilization of the building, structure or *premises*.

❖ Despite the assessment of a penalty in the form of a fine or imprisonment against a violator, the violation itself must still be corrected. Failure to make the necessary corrections will result in the violator being subject to additional penalties as described in the preceding section.

SECTION 107
NOTICES AND ORDERS

107.1 Notice to person responsible. Whenever the *code official* determines that there has been a violation of this code or has grounds to believe that a violation has occurred, notice shall be given in the manner prescribed in Sections 107.2 and 107.3 to the person responsible for the violation as specified in this code. Notices for condemnation procedures shall comply with Section 108.3.

❖ Written notice must be given to the person responsible for the property (i.e., occupant) when the code official observes a violation of the code. Where a property is condemned, the person responsible for the property must be informed of the intent to placard and vacate the structure.

The person responsible must be notified when a building is placarded. This is important because both the person responsible and the owner can be charged with a violation of the code if they fail to vacate the structure.

It is also important for the code official to keep copies of all written notices issued. If the person responsible for the property or occupants fail to abide by a verbal order, the code official needs something more substantial to pursue enforcement action. If further enforcement procedures are warranted, the code official will need a complete, chronologically written documentation of all notices and orders that have been issued.

107.2 Form. Such notice prescribed in Section 107.1 shall be in accordance with all of the following:

1. Be in writing.
2. Include a description of the real estate sufficient for identification.
3. Include a statement of the violation or violations and why the notice is being issued.
4. Include a correction order allowing a reasonable time to make the repairs and improvements required to bring the *dwelling unit* or structure into compliance with the provisions of this code.

INTERNATIONAL CODE COUNCIL®
Copyright © 2018 ICC. ALL RIGHTS RESERVED. Accessed by Jim Davis (JDavis@ShakopeeMN.gov), (City of Shakopee) Order Number #101054067 on Mar 17, 2021 01:42 PM (PDT) pursuant to License Agreement with ICC. No further reproduction, no further reproductions by any third party, or distribution authorized. Single user only, copying and networking prohibited. ANY UNAUTHORIZED REPRODUCTION OR DISTRIBUTION IS A VIOLATION OF THE FEDERAL COPYRIGHT ACT AND THE LICENSE AGREEMENT, AND SUBJECT TO CIVIL AND CRIMINAL PENALTIES THEREUNDER.

101054067

5. Inform the property *owner* or owner's authorized agent of the right to appeal.
6. Include a statement of the right to file a lien in accordance with Section 106.3.

❖ The notice required by Section 107.1 must:

- Be in writing. A verbal notice is unreliable.
- Clearly identify the property. The address of the property is sufficient when it is readily available. The legal description may be necessary when the address for the property is missing or if the land is vacant and lacks an address.
- State why the notice is being issued, and identify what part of the code is being violated.
- Include a correction order, and state what repairs need to be made to bring the property back into compliance with the code.
- Allow a reasonable time for compliance. This is subjective. A reasonable time must not only include adequate time to allow owners to make repairs, but must also address the risk to the occupants and the public. As an example, if a portion of a building is collapsing, the owner may believe that a reasonable time to correct the damage should be several weeks or even months; however, a collapsing wall creates an immediate danger to the public. The code official should require completion of all repairs within a few days or, in extreme cases, in a matter of hours.
- Provide the person responsible for the property with a notice of his or her right to seek modification or withdrawal of the order by appealing to a board of appeals in accordance with Section 111.

107.3 Method of service. Such notice shall be deemed to be properly served if a copy thereof is: delivered personally, or sent by certified or first-class mail addressed to the last known address. If the notice is returned showing that the letter was not delivered, a copy thereof shall be posted in a conspicuous place in or about the structure affected by such notice.

❖ Proper service of all notices is crucial. Improper or inadequate service may make satisfactory pursuit of enforcement impossible. Proper service requires one of the following methods:

- Personal delivery to the owner or the responsible person designated by the owner. This is the most effective form of service. Usually, personal service is provided by a personal service company (i.e., a third-party agency), the code official or the sheriff's office in the jurisdiction where the person to be served lives.
- Delivery by certified or registered mail addressed to the owner or the owner's designated agent at the last known address, with a return receipt requested. This is a valid method of service, but sometimes it is not reliable. The owner may refuse to accept or ignore the service if he or she knows the jurisdiction plans to send notices. Also, it may take 10 to 14 days before the code official is notified by the post office that service could not be made. If the notice required the owner or owner's agent to correct something in a short time, the time for compliance may pass before the code official is aware the post office has not made the delivery.
- If the certified or registered letter is returned as undelivered, posting a copy in an easy-to-see place in or about the structure will suffice. Since the code official must wait until the post office returns undelivered certified letters before they can be posted, this form of service is very time consuming.

All of the services noted above may be expensive and time consuming. In some communities, the courts may consider service to be valid if the notice was sent to the last known address of the owner or owner's agent by regular postage and the notice was not returned by the post office. This method of service is obviously much cheaper and usually faster than waiting for the return of a certified letter. It must, however, be acceptable to the court system. The jurisdiction's attorney should be consulted to determine that the type of service is legally acceptable, reasonably cost effective and timely.

107.4 Unauthorized tampering. Signs, tags or seals posted or affixed by the *code official* shall not be mutilated, destroyed or tampered with, or removed without authorization from the *code official*.

❖ This section states that tampering with signs, seals or tags posted at the property is a violation of the code. The safety of the occupants may depend on the warning signs posted by the code official remaining in place.

107.5 Penalties. Penalties for noncompliance with orders and notices shall be as set forth in Section 106.4.

❖ This section references Section 106.4, which establishes penalties for violating provisions of the code.

107.6 Transfer of ownership. It shall be unlawful for the *owner* of any *dwelling unit* or structure who has received a compliance order or upon whom a notice of violation has been served to sell, transfer, mortgage, lease or otherwise dispose of such *dwelling unit* or structure to another until the provisions of the compliance order or notice of violation have been complied with, or until such *owner* or the owner's authorized agent shall first furnish the grantee, transferee, mortgagee or lessee a true copy of any compliance order or notice of violation issued by the *code official* and shall furnish to the *code official* a signed and notarized statement from the grantee, transferee, mortgagee or lessee, acknowledging the receipt of such compliance order or notice of vio-

INTERNATIONAL CODE COUNCIL®
Copyright © 2018 ICC. ALL RIGHTS RESERVED. Accessed by Jim Davis (JDavis@ShakopeeMN.gov), (City of Shakopee) Order Number #101054067 on Mar 17, 2021 01:42 PM (PDT) pursuant to License Agreement with ICC. No further reproduction, no further reproductions by any third party, or distribution authorized. Single user only, copying and networking prohibited. ANY UNAUTHORIZED REPRODUCTION OR DISTRIBUTION IS A VIOLATION OF THE FEDERAL COPYRIGHT ACT AND THE LICENSE AGREEMENT, AND SUBJECT TO CIVIL AND CRIMINAL PENALTIES THEREUNDER.

101054067

lation and fully accepting the responsibility without condition for making the corrections or repairs required by such compliance order or notice of violation.

❖ When a property has a pending violation order, it is unlawful for an owner to sell, transfer, mortgage, lease or otherwise dispose of the property without either following the order or advising the buyer, mortgagee, etc., of the pending violation. The owner must prove that the buyer has received notice of pending violations by providing the code official with a signed, notarized receipt from the new transferee.

Determining the current owner of a building is a frustrating and difficult activity. To evade code enforcement action, owners will frequently transfer ownership of their property. This provision of the code permits the code official to cite the seller if he or she did not provide the code official with the required notification when the property was transferred; thus, even though the seller may avoid complying with the outstanding violation orders, he or she can still be charged with a violation for failing to provide proof that the transferee was aware of the pending orders.

SECTION 108
UNSAFE STRUCTURES AND EQUIPMENT

108.1 General. When a structure or equipment is found by the *code official* to be unsafe, or when a structure is found unfit for human *occupancy*, or is found unlawful, such structure shall be *condemned* pursuant to the provisions of this code.

❖ This section provides a brief description of conditions where the code official is given the authority to condemn an existing structure or equipment. Where a structure or equipment is "unlawful," as described in the text of this section, that structure or equipment does not comply with the requirements of the code. The deficiencies are such that an unsafe condition or a condition that is unfit for human occupancy exists.

108.1.1 Unsafe structures. An unsafe structure is one that is found to be dangerous to the life, health, property or safety of the public or the *occupants* of the structure by not providing minimum safeguards to protect or warn *occupants* in the event of fire, or because such structure contains unsafe equipment or is so damaged, decayed, dilapidated, structurally unsafe or of such faulty construction or unstable foundation, that partial or complete collapse is possible.

❖ Any building that endangers life, health, safety or property is unsafe. A building is considered dangerous if it meets one or more of the following conditions:

- It lacks adequate protection from fire.
- It contains unsafe equipment.
- All or part of the building is likely to collapse.

Only structures with major defects or life-threatening conditions are considered unsafe. Minor defects, such as an inadequate number of electrical outlets or damaged plaster, do not necessarily create an unsafe structure, even though they are violations of the code.

108.1.2 Unsafe equipment. Unsafe equipment includes any boiler, heating equipment, elevator, moving stairway, electrical wiring or device, flammable liquid containers or other equipment on the *premises* or within the structure that is in such disrepair or condition that such equipment is a hazard to life, health, property or safety of the public or *occupants* of the *premises* or structure.

❖ Equipment may become unsafe when it is a hazard to life, health, property or safety.

The judgment of the code official is critical in determining when equipment should be deemed unsafe. If uncertain about appropriate enforcement action, he or she should seek additional expertise and advice and, if necessary, err on the side of safety.

108.1.3 Structure unfit for human occupancy. A structure is unfit for human *occupancy* whenever the *code official* finds that such structure is unsafe, unlawful or, because of the degree to which the structure is in disrepair or lacks maintenance, is insanitary, vermin or rat infested, contains filth and contamination, or lacks *ventilation*, illumination, sanitary or heating facilities or other essential equipment required by this code, or because the location of the structure constitutes a hazard to the *occupants* of the structure or to the public.

❖ A building is unfit for occupancy if it is: unsafe, unlawful, lacking maintenance to a serious degree, in disrepair, insanitary, vermin or rat infested, found to contain filth, lacking essential equipment, or located such that it is hazardous to the occupants or the public.

The list of reasons for declaring a structure unfit requires subjective judgement. Because the consequences of declaring a structure unfit for occupancy are severe, the code official should carefully and thoroughly document all conditions contributing to that determination.

108.1.4 Unlawful structure. An unlawful structure is one found in whole or in part to be occupied by more persons than permitted under this code, or was erected, altered or occupied contrary to law.

❖ An unlawful structure is one that has serious deficiencies such that an unsafe condition or a condition that is unfit for human occupancy exists. An unlawful structure does not mean one where there are criminal activities.

108.1.5 Dangerous structure or premises. For the purpose of this code, any structure or *premises* that has any or all of the conditions or defects described as follows shall be considered to be dangerous:

1. Any door, aisle, passageway, stairway, exit or other means of egress that does not conform to the *approved* building or fire code of the jurisdiction as related to the requirements for existing buildings.
2. The walking surface of any aisle, passageway, stairway, exit or other means of egress is so warped, worn loose, torn or otherwise unsafe as to not provide safe and adequate means of egress.

INTERNATIONAL CODE COUNCIL®
Copyright © 2018 ICC. ALL RIGHTS RESERVED. Accessed by Jim Davis (JDavis@ShakopeeMN.gov), (City of Shakopee) Order Number #101054067 on Mar 17, 2021 01:42 PM (PDT) pursuant to License Agreement with ICC. No further reproduction, no further reproductions by any third party, or distribution authorized. Single user only, copying and networking prohibited. ANY UNAUTHORIZED REPRODUCTION OR DISTRIBUTION IS A VIOLATION OF THE FEDERAL COPYRIGHT ACT AND THE LICENSE AGREEMENT, AND SUBJECT TO CIVIL AND CRIMINAL PENALTIES THEREUNDER.

101054067

3. Any portion of a building, structure or appurtenance that has been damaged by fire, earthquake, wind, flood, *deterioration*, *neglect*, abandonment, vandalism or by any other cause to such an extent that it is likely to partially or completely collapse, or to become *detached* or dislodged.
4. Any portion of a building, or any member, appurtenance or ornamentation on the exterior thereof that is not of sufficient strength or stability, or is not so *anchored*, attached or fastened in place so as to be capable of resisting natural or artificial loads of one and one-half the original designed value.
5. The building or structure, or part of the building or structure, because of dilapidation, *deterioration*, decay, faulty construction, the removal or movement of some portion of the ground necessary for the support, or for any other reason, is likely to partially or completely collapse, or some portion of the foundation or underpinning of the building or structure is likely to fail or give way.
6. The building or structure, or any portion thereof, is clearly unsafe for its use and *occupancy*.
7. The building or structure is *neglected*, damaged, dilapidated, unsecured or abandoned so as to become an attractive nuisance to children who might play in the building or structure to their danger, becomes a harbor for vagrants, criminals or immoral persons, or enables persons to resort to the building or structure for committing a nuisance or an unlawful act.
8. Any building or structure has been constructed, exists or is maintained in violation of any specific requirement or prohibition applicable to such building or structure provided by the *approved* building or fire code of the jurisdiction, or of any law or ordinance to such an extent as to present either a substantial risk of fire, building collapse or any other threat to life and safety.
9. A building or structure, used or intended to be used for dwelling purposes, because of inadequate maintenance, dilapidation, decay, damage, faulty construction or arrangement, inadequate light, *ventilation*, mechanical or plumbing system, or otherwise, is determined by the *code official* to be unsanitary, unfit for human habitation or in such a condition that is likely to cause sickness or disease.
10. Any building or structure, because of a lack of sufficient or proper fire-resistance-rated construction, fire protection systems, electrical system, fuel connections, mechanical system, plumbing system or other cause, is determined by the *code official* to be a threat to life or health.
11. Any portion of a building remains on a site after the demolition or destruction of the building or structure or whenever any building or structure is abandoned so as to constitute such building or portion thereof as an attractive nuisance or hazard to the public.

❖ This specific section contains a general list of baseline conditions to evaluate a structure against to determine if its present condition is dangerous. The purpose of this section is to allow a code official to cite specific conditions under which he or she finds a structure to be dangerous. The list of conditions focuses on adequacy of the means of egress, structural, fire resistance, fire protection, and plumbing and ventilation systems.

108.2 Closing of vacant structures. If the structure is vacant and unfit for human habitation and *occupancy*, and is not in danger of structural collapse, the *code official* is authorized to post a placard of condemnation on the *premises* and order the structure closed up so as not to be an attractive nuisance. Upon failure of the *owner* or owner's authorized agent to close up the *premises* within the time specified in the order, the *code official* shall cause the *premises* to be closed and secured through any available public agency or by contract or arrangement by private persons and the cost thereof shall be charged against the real estate upon which the structure is located and shall be a lien upon such real estate and shall be collected by any other legal resource.

❖ Code officials are granted the authority to condemn, placard and vacate any building that they determine to be unsafe, unlawful or unfit for occupancy. Also, code officials may remove unsafe equipment from use.

No one is permitted to reoccupy or reuse any building or equipment until the code official has given his or her approval. Unsafe structures, unsafe equipment, buildings that are unfit for human occupancy and unlawful structures are further defined in subsequent sections.

The ability to condemn and vacate structures is a powerful enforcement tool. It protects occupants from danger and prevents owners from collecting income on their properties. Before condemning or vacating structures, the code official should establish a clearly defined list of violations that warrant such actions. Additionally, it is critical to document all of the violations found in each building to be condemned. When practical, photographs should be taken of violations. Should litigation become necessary, photographs provide powerful documentation.

Open, vacant buildings are an attractive nuisance to children, a potential fire hazard, a harborage for rodents and insects and a potential home for vagrants. Vacant buildings also create a blighting influence within a community.

The code official is authorized to condemn as unfit those buildings that are vacant and open to trespass but not in danger of collapse. When the owner has been ordered to secure an open building but fails to

INTERNATIONAL CODE COUNCIL®
Copyright © 2018 ICC. ALL RIGHTS RESERVED. Accessed by Jim Davis (JDavis@ShakopeeMN.gov), (City of Shakopee) Order Number #101054067 on Mar 17, 2021 01:42 PM (PDT) pursuant to License Agreement with ICC. No further reproduction, no further reproductions by any third party, or distribution authorized. Single user only, copying and networking prohibited. ANY UNAUTHORIZED REPRODUCTION OR DISTRIBUTION IS A VIOLATION OF THE FEDERAL COPYRIGHT ACT AND THE LICENSE AGREEMENT, AND SUBJECT TO CIVIL AND CRIMINAL PENALTIES THEREUNDER.

101054067

do so, the code official must secure the structure by contracting with a public or private agent to close up the building.

The costs for closing buildings are to be charged to the property in the form of a lien. Generally, once a lien has been filed against a property, it must be satisfied before the property can be sold. This section authorizes collection by any other legal resource. It also allows collection by additional methods such as small claims judgements, collection agency actions and personal liens. This enhances the chances of cost recovery.

108.2.1 Authority to disconnect service utilities. The *code official* shall have the authority to authorize disconnection of utility service to the building, structure or system regulated by this code and the referenced codes and standards set forth in Section 102.7 in case of emergency where necessary to eliminate an immediate hazard to life or property or where such utility connection has been made without approval. The *code official* shall notify the serving utility and, whenever possible, the *owner* or owner's authorized agent and *occupant* of the building, structure or service system of the decision to disconnect prior to taking such action. If not notified prior to disconnection the *owner*, owner's authorized agent or *occupant* of the building structure or service system shall be notified in writing as soon as practical thereafter.

❖ Disconnecting a service utility from the energy supply is the most radical method of hazard abatement available to the code official and should be reserved for cases in which all other lesser remedies have proven ineffective. Such an action must be preceded by a written notice to the owner and any occupants of the building being ordered to disconnect. Disconnection must be accomplished within the timeframe established by the code official in the written notification. When the hazard to the public health and welfare is so imminent as to mandate immediate disconnection, the code official has the authority and even the obligation to cause disconnection without notice.

108.3 Notice. Whenever the *code official* has condemned a structure or equipment under the provisions of this section, notice shall be posted in a conspicuous place in or about the structure affected by such notice and served on the *owner*, owner's authorized agent or the person or persons responsible for the structure or equipment in accordance with Section 107.3. If the notice pertains to equipment, it shall be placed on the condemned equipment. The notice shall be in the form prescribed in Section 107.2.

❖ The condemnation notice is required to be posted at the structure, and the owner, the owner's authorized agent or responsible person in charge is to be served notice in accordance with the procedure in Section 107.3, in the form prescribed in Section 107.2. If the notice includes condemned equipment, the notice must also be placed on that equipment.

108.4 Placarding. Upon failure of the *owner,* owner's authorized agent or person responsible to comply with the notice provisions within the time given, the *code official* shall post on the *premises* or on defective equipment a placard bearing the word "Condemned" and a statement of the penalties provided for occupying the *premises*, operating the equipment or removing the placard.

❖ If the owner fails to comply with the notice, a placard indicating that the structure is condemned as unfit for human occupancy or use should be posted on the property or equipment. This placard should also show the penalty for illegal occupancy of the building or equipment, and for removing the placard.

Immediate enforcement action should be pursued when there is an illegal occupancy of a condemned building or equipment. The credibility of the code enforcement program is dependent upon the public's belief that the code will be adequately enforced.

Any owner, owner's authorized agent, or other responsible party who has failed to comply with a correction order must vacate the property immediately after the time for correction has passed. All occupants should be given reasonable time to find other accommodations.

108.4.1 Placard removal. The *code official* shall remove the condemnation placard whenever the defect or defects upon which the condemnation and placarding action were based have been eliminated. Any person who defaces or removes a condemnation placard without the approval of the *code official* shall be subject to the penalties provided by this code.

❖ Only the code official is authorized to remove a condemnation placard. The code official is to remove the placard only when the defect or defects have been corrected as required by the code. Any other person who removes or defaces a placard is in violation of the code and subject to its penalties.

108.5 Prohibited occupancy. Any occupied structure condemned and placarded by the *code official* shall be vacated as ordered by the *code official*. Any person who shall occupy a placarded *premises* or shall operate placarded equipment, and any *owner,* owner's authorized agent or person responsible for the *premises* who shall let anyone occupy a placarded *premises* or operate placarded equipment shall be liable for the penalties provided by this code.

❖ It is important that any unsafe structure be vacated to help prevent possible injury to or death of its occupants. The code official has the authority to require a condemned building to be vacated. Anyone who continues to occupy a placarded building or equipment and any owner who permits another to occupy a placarded building or equipment are subject to the penalties provided by the code.

108.6 Abatement methods. The *owner*, owner's authorized agent, *operator* or *occupant* of a building, *premises* or equipment deemed unsafe by the *code official* shall abate or cause to be abated or corrected such unsafe conditions either by repair, rehabilitation, demolition or other *approved* corrective action.

❖ This section describes the usual circumstance in which a building has such critical violations that it is declared unsafe by the code official. The owner, operator or occupant should take abatement mea-

INTERNATIONAL CODE COUNCIL®
Copyright © 2018 ICC. ALL RIGHTS RESERVED. Accessed by Jim Davis (JDavis@ShakopeeMN.gov), (City of Shakopee) Order Number #101054067 on Mar 17, 2021 01:42 PM (PDT) pursuant to License Agreement with ICC. No further reproduction, no further reproductions by any third party, or distribution authorized. Single user only, copying and networking prohibited. ANY UNAUTHORIZED REPRODUCTION OR DISTRIBUTION IS A VIOLATION OF THE FEDERAL COPYRIGHT ACT AND THE LICENSE AGREEMENT, AND SUBJECT TO CIVIL AND CRIMINAL PENALTIES THEREUNDER.

101054067

sures to correct the unsafe condition. If this is not done promptly, the code official has the authority to directly abate the unsafe conditions and bill the owner for the abatement work in accordance with the code.

108.7 Record. The *code official* shall cause a report to be filed on an unsafe condition. The report shall state the *occupancy* of the structure and the nature of the unsafe condition.

❖ The code official must file a report on each investigation of unsafe conditions, stating the occupancy of the structure and the nature of the unsafe condition.

SECTION 109
EMERGENCY MEASURES

109.1 Imminent danger. When, in the opinion of the *code official*, there is *imminent danger* of failure or collapse of a building or structure that endangers life, or when any structure or part of a structure has fallen and life is endangered by the occupation of the structure, or when there is actual or potential danger to the building *occupants* or those in the proximity of any structure because of explosives, explosive fumes or vapors or the presence of toxic fumes, gases or materials, or operation of defective or dangerous equipment, the *code official* is hereby authorized and empowered to order and require the *occupants* to vacate the *premises* forthwith. The *code official* shall cause to be posted at each entrance to such structure a notice reading as follows: "This *Structure* Is Unsafe and Its *Occupancy* Has Been Prohibited by the *Code Official*." It shall be unlawful for any person to enter such structure except for the purpose of securing the structure, making the required repairs, removing the hazardous condition or of demolishing the same.

❖ If the code official has determined that failure or collapse of a building or structure is imminent, failure has occurred that results in a continued threat to the remaining structure or adjacent properties or any other unsafe condition as described in this section exists in a structure, he or she is authorized to require the occupants to vacate the premises and to post such buildings or structures as unsafe and not occupiable. Unless authorized by the code official to make repairs, secure or demolish the structure, it is illegal for anyone to enter the building or structure. This will minimize the potential for injury.

109.2 Temporary safeguards. Notwithstanding other provisions of this code, whenever, in the opinion of the *code official*, there is *imminent danger* due to an unsafe condition, the *code official* shall order the necessary work to be done, including the boarding up of openings, to render such structure temporarily safe whether or not the legal procedure herein described has been instituted; and shall cause such other action to be taken as the *code official* deems necessary to meet such emergency.

❖ This section recognizes the need for immediate and effective action in order to protect the public. This section empowers the code official to cause the necessary work to be done to temporarily minimize the imminent danger without regard for due process. This section has to be viewed critically insofar as the danger of structural failure must be "imminent"; that is, readily apparent and immediate.

109.3 Closing streets. When necessary for public safety, the *code official* shall temporarily close structures and close, or order the authority having jurisdiction to close, sidewalks, streets, *public ways* and places adjacent to unsafe structures, and prohibit the same from being utilized.

❖ The code official is authorized to temporarily close sidewalks, streets and adjacent structures as needed to provide for the public safety from the unsafe building or structure when an imminent danger exists. Since the code official may not have the direct authority to close sidewalks, streets and other public ways, the agency having such jurisdiction (e.g., the police or highway department) must be notified.

109.4 Emergency repairs. For the purposes of this section, the *code official* shall employ the necessary labor and materials to perform the required work as expeditiously as possible.

❖ The cost of emergency work may have to be initially paid for by the jurisdiction. The important principle here is that the code official must act immediately to protect the public when warranted, leaving the details of costs and owner notification for later.

109.5 Costs of emergency repairs. Costs incurred in the performance of emergency work shall be paid by the jurisdiction. The legal counsel of the jurisdiction shall institute appropriate action against the *owner* of the *premises* or owner's authorized agent where the unsafe structure is or was located for the recovery of such costs.

❖ The cost of emergency repairs is to be paid by the jurisdiction, with subsequent legal action against the owner to recover such costs. This does not preclude, however, reaching an alternative agreement with the owner.

109.6 Hearing. Any person ordered to take emergency measures shall comply with such order forthwith. Any affected person shall thereafter, upon petition directed to the appeals board, be afforded a hearing as described in this code.

❖ Anyone ordered to take an emergency measure or to vacate a structure because of an emergency condition must do so immediately.

Thereafter, any affected party has the right to appeal the action to the appeals board to determine whether the order should be continued, modified or revoked.

It is imperative that appeals to an emergency order occur after the hazard has been abated, rather than before, to minimize the risk to the occupants, employees, clients and the public.

SECTION 110
DEMOLITION

110.1 General. The *code official* shall order the *owner* or owner's authorized agent of any *premises* upon which is located any structure, which in the *code official's* or owner's

INTERNATIONAL CODE COUNCIL®
Copyright © 2018 ICC. ALL RIGHTS RESERVED. Accessed by Jim Davis (JDavis@ShakopeeMN.gov), (City of Shakopee) Order Number #101054067 on Mar 17, 2021 01:42 PM (PDT) pursuant to License Agreement with ICC. No further reproduction, no further reproductions by any third party, or distribution authorized. Single user only, copying and networking prohibited. ANY UNAUTHORIZED REPRODUCTION OR DISTRIBUTION IS A VIOLATION OF THE FEDERAL COPYRIGHT ACT AND THE LICENSE AGREEMENT, AND SUBJECT TO CIVIL AND CRIMINAL PENALTIES THEREUNDER.

101054067

authorized agent judgment after review is so deteriorated or dilapidated or has become so out of repair as to be dangerous, unsafe, insanitary or otherwise unfit for human habitation or occupancy, and such that it is unreasonable to repair the structure, to demolish and remove such structure; or if such structure is capable of being made safe by repairs, to repair and make safe and sanitary, or to board up and hold for future repair or to demolish and remove at the *owner's* option; or where there has been a cessation of normal construction of any structure for a period of more than two years, the *code official* shall order the *owner* or owner's authorized agent to demolish and remove such structure, or board up until future repair. Boarding the building up for future repair shall not extend beyond one year, unless *approved* by the building official.

❖ This section describes conditions where the code official has the authority to order the owner to remove the structure. Conditions where the code official may give the owner the option of repairing the structure or boarding the structure for future repair are also in this section. The code official should carefully document the condition of the structure prior to issuing a demolition order to provide an adequate basis for ordering the owner to remove the structure. Note that Appendix A contains boarding provisions, but must be specifically referenced in the adopting ordinance of the jurisdiction to be mandatory.

110.2 Notices and orders. Notices and orders shall comply with Section 107.

❖ Before the code official can pursue action to demolish a building in accordance with Section 110.1 or 110.3, it is imperative that all owners and any other persons with a recorded encumbrance on the property be given proper notice of the demolition plans (see Section 107 for notice and order requirements).

110.3 Failure to comply. If the *owner* of a *premises* or owner's authorized agent fails to comply with a demolition order within the time prescribed, the *code official* shall cause the structure to be demolished and removed, either through an available public agency or by contract or arrangement with private persons, and the cost of such demolition and removal shall be charged against the real estate upon which the structure is located and shall be a lien upon such real estate.

❖ Where the owner fails to comply with a demolition order, the code official is authorized to take action to have the building razed and removed. The costs are to be charged as a lien against the real estate. To reduce complaints regarding the validity of demolition costs, the code official will obtain competitive bids from several demolition contractors before authorizing any contractor to raze the structure.

110.4 Salvage materials. Where any structure has been ordered demolished and removed, the governing body or other designated officer under said contract or arrangement aforesaid shall have the right to sell the salvage and valuable materials. The net proceeds of such sale, after deducting the expenses of such demolition and removal, shall be promptly remitted with a report of such sale or transaction, including the items of expense and the amounts deducted, for the person who is entitled thereto, subject to any order of a court. If such a surplus does not remain to be turned over, the report shall so state.

❖ The governing body may sell any valuables or salvageable materials for the highest price obtainable. The costs of demolition are then to be deducted from any proceeds from the sale of salvage. If a surplus of funds remains, it is to be remitted to the owner with an itemized expense and income account; however, if no surplus remains, this must also be reported.

SECTION 111
MEANS OF APPEAL

[A] 111.1 Application for appeal. Any person directly affected by a decision of the *code official* or a notice or order issued under this code shall have the right to appeal to the board of appeals, provided that a written application for appeal is filed within 20 days after the day the decision, notice or order was served. An application for appeal shall be based on a claim that the true intent of this code or the rules legally adopted thereunder have been incorrectly interpreted, the provisions of this code do not fully apply, or the requirements of this code are adequately satisfied by other means.

❖ This section allows a person with a material or definitive interest in the decision of the code official to appeal that decision. The aggrieved party may not appeal a code requirement. The appeal process is not intended to waive or set aside a code requirement, but to provide a means of reviewing a code official's decision on an interpretation or application of the code or to approve or reject the equivalency of protection to the code requirement.

[A] 111.2 Membership of board. The board of appeals shall consist of not less than three members who are qualified by experience and training to pass on matters pertaining to property maintenance and who are not employees of the jurisdiction. The *code official* shall be an ex-officio member but shall not vote on any matter before the board. The board shall be appointed by the chief appointing authority, and shall serve staggered and overlapping terms.

❖ The concept of the board is to provide an objective group of persons who review the matters brought to them and make a collective decision. The members of the board are not to be employees of the jurisdiction and are to have sufficient knowledge and experience to act on the concerns that are heard. A minimum of three board members is specified for a fair and impartial hearing process. Staggered terms are appropriate for uniform changeover such that a minimum number of board members are new each year. The number of members is to be determined by the chief appointing authority.

[A] 111.2.1 Alternate members. The chief appointing authority shall appoint not less than two alternate members who shall be called by the board chairman to hear appeals during the absence or disqualification of a member. Alternate

INTERNATIONAL CODE COUNCIL®
Copyright © 2018 ICC. ALL RIGHTS RESERVED. Accessed by Jim Davis (JDavis@ShakopeeMN.gov), (City of Shakopee) Order Number #101054067 on Mar 17, 2021 01:42 PM (PDT) pursuant to License Agreement with ICC. No further reproduction, no further reproductions by any third party, or distribution authorized. Single user only, copying and networking prohibited. ANY UNAUTHORIZED REPRODUCTION OR DISTRIBUTION IS A VIOLATION OF THE FEDERAL COPYRIGHT ACT AND THE LICENSE AGREEMENT, AND SUBJECT TO CIVIL AND CRIMINAL PENALTIES THEREUNDER.

101054067

members shall possess the qualifications required for board membership.

❖ This section authorizes the chief appointing authority to appoint two alternate members who are to be available if the principal members of the board are absent or disqualified. Alternate members must possess the same qualifications as the principal members.

[A] 111.2.2 Chairman. The board shall annually select one of its members to serve as chairman.

❖ It is customary to determine chairmanship annually so that a regular opportunity is available to evaluate and either reappoint the current chairman or appoint a new one.

[A] 111.2.3 Disqualification of member. A member shall not hear an appeal in which that member has a personal, professional or financial interest.

❖ All members must disqualify themselves regarding any appeal in which they have a personal, professional or financial interest.

[A] 111.2.4 Secretary. The chief administrative officer shall designate a qualified person to serve as secretary to the board. The secretary shall file a detailed record of all proceedings in the office of the chief administrative officer.

❖ The chief administrative officer is to designate a qualified clerk to serve as secretary to the board. The secretary is required to file a detailed record of all proceedings in the office of the chief administrative officer.

[A] 111.2.5 Compensation of members. Compensation of members shall be determined by law.

❖ Members of the board of appeals are not required to be compensated unless required by the local municipality or jurisdiction.

[A] 111.3 Notice of meeting. The board shall meet upon notice from the chairman, within 20 days of the filing of an appeal, or at stated periodic meetings.

❖ The board must meet within 20 days of the filing of an appeal or at regularly scheduled meetings. This provides adequate time to coordinate the board members' schedules, and also requires that the board consider the appeal in a timely manner.

[A] 111.4 Open hearing. Hearings before the board shall be open to the public. The appellant, the appellant's representative, the *code official* and any person whose interests are affected shall be given an opportunity to be heard. A quorum shall consist of not less than two-thirds of the board membership.

❖ All hearings before the board must be open to the public. The appellant, the appellant's representative, the code official and any person whose interests are affected must be heard.

The quorum of two-thirds of the board is to be present for the board to take any official action.

[A] 111.4.1 Procedure. The board shall adopt and make available to the public through the secretary procedures under which a hearing will be conducted. The procedures shall not require compliance with strict rules of evidence, but shall mandate that only relevant information be received.

❖ The board is required to establish and make available to the public written procedures detailing how hearings are to be conducted. Additionally, this section provides that, although strict rules of evidence are not applicable, the information presented must be deemed relevant.

[A] 111.5 Postponed hearing. When the full board is not present to hear an appeal, either the appellant or the appellant's representative shall have the right to request a postponement of the hearing.

❖ When all members of the board are not present, either the appellant or the appellant's representative may request a postponement of the hearing. This request may be made even though a quorum is present.

[A] 111.6 Board decision. The board shall modify or reverse the decision of the *code official* only by a concurring vote of a majority of the total number of appointed board members.

❖ A concurring vote of a majority of the members present is needed to modify or reverse the decision of the code official.

[A] 111.6.1 Records and copies. The decision of the board shall be recorded. Copies shall be furnished to the appellant and to the *code official*.

❖ A formal decision is required to provide an official record. Copies are to be furnished to both the appellant and the code official. The code official is bound by the action of the board of appeals, unless it is the opinion of him or her that the board of appeals has acted improperly. In such cases, relief through the court having jurisdiction may be sought by corporate counsel.

[A] 111.6.2 Administration. The *code official* shall take immediate action in accordance with the decision of the board.

❖ To avoid any undue hindrance in the progress of construction, the code official is required to act without delay based on the board's decision. This action may be to enforce the decision or to seek judicial relief if the board's action can be demonstrated to be inappropriate.

[A] 111.7 Court review. Any person, whether or not a previous party of the appeal, shall have the right to apply to the appropriate court for a writ of certiorari to correct errors of law. Application for review shall be made in the manner and time required by law following the filing of the decision in the office of the chief administrative officer.

❖ This section allows any person to request a review by the court of jurisdiction with regard to perceived errors of law. Application for such review must be

INTERNATIONAL CODE COUNCIL®
Copyright © 2018 ICC. ALL RIGHTS RESERVED. Accessed by Jim Davis (JDavis@ShakopeeMN.gov), (City of Shakopee) Order Number #101054067 on Mar 17, 2021 01:42 PM (PDT) pursuant to License Agreement with ICC. No further reproduction, no further reproductions by any third party, or distribution authorized. Single user only, copying and networking prohibited. ANY UNAUTHORIZED REPRODUCTION OR DISTRIBUTION IS A VIOLATION OF THE FEDERAL COPYRIGHT ACT AND THE LICENSE AGREEMENT, AND SUBJECT TO CIVIL AND CRIMINAL PENALTIES THEREUNDER.

101054067

made after the decision of the board is filed with the chief administrative officer. This helps all those concerned to observe due process.

[A] 111.8 Stays of enforcement. Appeals of notice and orders (other than *Imminent Danger* notices) shall stay the enforcement of the notice and order until the appeal is heard by the appeals board.

❖ The purpose of this section is to specify that if an appeal is made, the jurisdiction is not to enforce its notice or order until such appeal has been heard by the board of appeals. This does not apply, of course, to imminent danger notices.

SECTION 112
STOP WORK ORDER

[A] 112.1 Authority. Whenever the *code official* finds any work regulated by this code being performed in a manner contrary to the provisions of this code or in a dangerous or unsafe manner, the *code official* is authorized to issue a stop work order.

❖ This section provides for the suspension of work for which a permit was issued, pending the removal or correction of a severe violation or unsafe condition identified by the code official.

Normally, correction notices are used to inform the permit holder of code violations. Stop work orders are issued when enforcement can be accomplished no other way or when a dangerous condition exists.

[A] 112.2 Issuance. A stop work order shall be in writing and shall be given to the *owner* of the property, to the *owner's* authorized agent, or to the person doing the work. Upon issuance of a stop work order, the cited work shall immediately cease. The stop work order shall state the reason for the order and the conditions under which the cited work is authorized to resume.

❖ Upon receipt of a violation notice from the code official, all construction activities identified in the notice must immediately cease, except as expressly permitted to correct the violation.

[A] 112.3 Emergencies. Where an emergency exists, the *code official* shall not be required to give a written notice prior to stopping the work.

❖ This section gives the code official the authority to stop the work in dispute immediately when, in his or her opinion, there is an unsafe emergency condition that has been created by the work. The need for the written notice is suspended for this situation so that the work can be stopped immediately. After the work is stopped, immediate measures should be taken to correct the work at issue.

[A] 112.4 Failure to comply. Any person who shall continue any work after having been served with a stop work order, except such work as that person is directed to perform to remove a violation or unsafe condition, shall be liable to a fine of not less than **[AMOUNT]** dollars or more than **[AMOUNT]** dollars.

❖ The local jurisdiction is to designate the fine that is to apply to any person who continues work that is at issue, other than abatement work. The dollar amounts for the minimum and maximum fines are to be specified in the adopting ordinance.

INTERNATIONAL CODE COUNCIL®
Copyright © 2018 ICC. ALL RIGHTS RESERVED. Accessed by Jim Davis (JDavis@ShakopeeMN.gov), (City of Shakopee) Order Number #101054067 on Mar 17, 2021 01:42 PM (PDT) pursuant to License Agreement with ICC. No further reproduction, no further reproductions by any third party, or distribution authorized. Single user only, copying and networking prohibited. ANY UNAUTHORIZED REPRODUCTION OR DISTRIBUTION IS A VIOLATION OF THE FEDERAL COPYRIGHT ACT AND THE LICENSE AGREEMENT, AND SUBJECT TO CIVIL AND CRIMINAL PENALTIES THEREUNDER.

101054067

Chapter 2: Definitions

General Comments

The words or terms defined in this chapter are deemed to be of prime importance in both specifying the subject matter of code provisions and giving meaning to certain terms used throughout the code for administrative or enforcement purposes.

Section 201 addresses the practical concerns encountered when interpreting the code in relation to the use of gender, tense and singular versus plural. This section also provides the code official with guidance for finding definitions of those words or terms not defined herein.

Section 202 provides an alphabetical listing of those terms that are commonly used throughout the code and that are required for the effective application of code requirements.

Purpose

Codes, by their very nature, are technical documents. Every word, term and punctuation mark can alter a sentence's meaning and, if misused, muddy its intent.

Further, the code, with its broad scope of applicability, includes terms inherent in a variety of construction disciplines. These terms can often have multiple meanings, depending on the context or discipline being used at the time.

For these reasons, it is necessary to maintain a consensus on the specific meaning of terms contained in the code. Chapter 2 performs this function by stating clearly what specific terms mean for the purpose of the code.

SECTION 201 GENERAL

201.1 Scope. Unless otherwise expressly stated, the following terms shall, for the purposes of this code, have the meanings shown in this chapter.

❖ In the application of the code, the terms used have the meanings given in this chapter.

201.2 Interchangeability. Words stated in the present tense include the future; words stated in the masculine gender include the feminine and neuter; the singular number includes the plural and the plural, the singular.

❖ While the definitions contained in this chapter are to be taken literally, gender and tense are to be considered interchangeable. This is so that any grammatical inconsistencies within the code text will not hinder the understanding or enforcement of the requirements.

201.3 Terms defined in other codes. Where terms are not defined in this code and are defined in the *International Building Code, International Existing Building Code, International Fire Code, International Fuel Gas Code, International Mechanical Code, International Plumbing Code, International Residential Code, International Zoning Code* or NFPA 70, such terms shall have the meanings ascribed to them as stated in those codes.

❖ When a word or term appears in the code and that word or term is not defined in this chapter, other references may be used to find its definition, including the *International Building Code*® (IBC®), *International Existing Building Code*® (IEBC®), *International Fire Code*® (IFC®), *International Fuel Gas Code*® (IFGC®), *International Mechanical Code*® (IMC®), *International Plumbing Code*® (IPC®), *International Residential Code*® (IRC®) and *International Zoning Code*® (IZC®). These codes contain additional definitions (some parallel and duplicative) that may be used in the enforcement of either this code or other codes by reference.

201.4 Terms not defined. Where terms are not defined through the methods authorized by this section, such terms shall have ordinarily accepted meanings such as the context implies.

❖ Another resource for defining words or terms not defined herein or in other codes is their "ordinarily accepted meanings." The intent of this statement is that a dictionary definition may suffice, provided that the definition is in context.

Often, construction terms used throughout the code may not be defined in this chapter or in a dictionary. In such cases, one would first turn to the definitions contained in the referenced standards (see Chapter 8) and then to published textbooks on the subject in question.

201.5 Parts. Whenever the words "*dwelling unit*," "dwelling," "*premises*," "building," "*rooming house*," "*rooming unit*," "*housekeeping unit*" or "story" are stated in this code, they shall be construed as though they were followed by the words "or any part thereof."

❖ Each and every portion of a structure, whether the structure is used for one type of occupancy or several, must comply with the appropriate regulations established by the code. It is understood that every portion or any part of a structure must comply with the code. Instead of being wordy, "or any part thereof" is considered to be included after "dwelling," "building," housekeeping unit," "rooming unit," etc.

INTERNATIONAL CODE COUNCIL®
Copyright © 2018 ICC. ALL RIGHTS RESERVED. Accessed by Jim Davis (JDavis@ShakopeeMN.gov), (City of Shakopee) Order Number #101054067 on Mar 17, 2021 01:42 PM (PDT) pursuant to License Agreement with ICC. No further reproduction, no further reproductions by any third party, or distribution authorized. Single user only, copying and networking prohibited. ANY UNAUTHORIZED REPRODUCTION OR DISTRIBUTION IS A VIOLATION OF THE FEDERAL COPYRIGHT ACT AND THE LICENSE AGREEMENT, AND SUBJECT TO CIVIL AND CRIMINAL PENALTIES THEREUNDER.

101054067

SECTION 202
GENERAL DEFINITIONS

ANCHORED. Secured in a manner that provides positive connection.

❖ This definition describes the term "anchored" for use in determining unsafe conditions related to exterior walls, flooring and flooring components, wall veneer and trim, overhangs and projections, stairs, porches and decks and foundation systems. Where it is apparent that a positive connection at these elements does not exist, the code official can cite the condition as unsafe and require repair as needed (see Sections 304.1.1 and 305.1.1).

[A] APPROVED. Acceptable to the *code official*.

❖ As related to the process of acceptance of building installations, including materials, equipment and construction systems, this definition identifies where ultimate authority rests. Where this term is used, the intent is that only the enforcing authority can accept a specific installation or component as complying with the code.

BASEMENT. That portion of a building that is partly or completely below grade.

❖ This definition defines that portion of a building that is partly or completely below grade as being a basement. In this case, "grade" refers to the finished ground level adjacent to the exterior walls at all points around the building perimeter.

BATHROOM. A room containing plumbing fixtures including a bathtub or shower.

❖ A bathroom is literally a room containing plumbing fixtures, which is used for personal hygiene.

To be considered a bathroom, such a room need only contain one or more bathtubs or showers. Traditionally, bathrooms are designed to afford privacy to an individual; however, such rooms may be designed to accommodate multiple users or bathers.

In everyday usage, the term is used interchangeably with toilet room (see the definition of "Toilet room") and, in this context, people expect a bathroom to also contain plumbing fixtures used for the elimination of bodily wastes (water closets and urinals), and fixtures used for bodily cleansing, such as lavatories (sinks).

The typical bathroom in residential occupancies contains a water closet, a lavatory and either a shower or a bathtub or a shower and a bathtub. A residential bathroom may also contain a bidet.

BEDROOM. Any room or space used or intended to be used for sleeping purposes in either a dwelling or *sleeping unit*.

❖ A bedroom, also referred to as a "sleeping room," is an area or room used for sleeping purposes. A bedroom typically contains a bed and a piece of furniture to store clothing or a closet, although these are not required. Bedrooms may also be temporarily used for other purposes when containing fold-up or dual-purpose furniture, such as daybeds or sleeper sofas. In any case, bedrooms must have sufficient floor space per person in order to be used as such in addition to meeting all the requirements of Section 404.4. The location and number of beds can be used to establish where people are sleeping and how many persons are occupying a dwelling at a given time.

[A] CODE OFFICIAL. The official who is charged with the administration and enforcement of this code, or any duly authorized representative.

❖ The statutory power to enforce the code is normally vested in a building department (or the like) of a state, county or municipality whose designated enforcement officer is termed the "code official" (see commentary, Section 104).

CONDEMN. To adjudge unfit for *occupancy*.

❖ To condemn is to pronounce a structure as unfit for occupancy or use. A condemnation is the result of the most serious of code violations in that it represents a condition that, in the opinion of the code official, poses a serious threat to the health and safety of the public or another structure or property. A violation that results in condemnation is typically followed by citations requesting immediate action. Depending on the severity of the situation, these actions may include vacating the premises, securing the structure or premises and, in some cases, demolition of the structure. When condemnation is used, care must be taken to follow all of the provisions outlined in Sections 107 through 110 (see commentary, Section 108).

COST OF SUCH DEMOLITION OR EMERGENCY REPAIRS. The costs shall include the actual costs of the demolition or repair of the structure less revenues obtained if salvage was conducted prior to demolition or repair. Costs shall include, but not be limited to, expenses incurred or necessitated related to demolition or emergency repairs, such as asbestos survey and abatement if necessary; costs of inspectors, testing agencies or experts retained relative to the demolition or emergency repairs; costs of testing; surveys for other materials that are controlled or regulated from being dumped in a landfill; title searches; mailing(s); postings; recording; and attorney fees expended for recovering of the cost of emergency repairs or to obtain or enforce an order of demolition made by a *code official*, the governing body or board of appeals.

❖ This definition summarizes the existing language of the code text in Sections 105.5, 106.3 and 110.3. All of these sections make reference to the jurisdiction's ability to recover costs. This definition describes what those "costs" are to include. Without a definition that brings the scope of these three sections together, there can be a lack of uniform enforcement regarding the actual costs of actions taken by a jurisdiction. This provides a basis of what is to be considered when preparing an invoice of expenses paid by the jurisdiction to protect the public due to inaction by a property owner who has received proper notice or orders from a code official, governing body or board of appeals.

INTERNATIONAL CODE COUNCIL®
Copyright © 2018 ICC. ALL RIGHTS RESERVED. Accessed by Jim Davis (JDavis@ShakopeeMN.gov), (City of Shakopee) Order Number #101054067 on Mar 17, 2021 01:42 PM (PDT) pursuant to License Agreement with ICC. No further reproduction, no further reproductions by any third party, or distribution authorized. Single user only, copying and networking prohibited. ANY UNAUTHORIZED REPRODUCTION OR DISTRIBUTION IS A VIOLATION OF THE FEDERAL COPYRIGHT ACT AND THE LICENSE AGREEMENT, AND SUBJECT TO CIVIL AND CRIMINAL PENALTIES THEREUNDER.

101054067

DETACHED. When a structural element is physically disconnected from another and that connection is necessary to provide a positive connection.

❖ This definition describes the term "detached" for use in determining unsafe conditions related to structural materials that may be beyond their limit state. "Limit state" is a condition beyond which a structure or member becomes unfit for service and is no longer useful for its intended function. Where it is apparent that a material is beyond its limit state due to detachment, the code official can cite the condition as unsafe and require repair as needed (see Section 306.1.1).

DETERIORATION. To weaken, disintegrate, corrode, rust or decay and lose effectiveness.

❖ This definition describes the term "deterioration" for use in determining unsafe conditions related to structural materials that may be beyond their limit state. "Limit state" is a condition beyond which a structure or member becomes unfit for service and is not longer useful for its intended function. Where it is apparent that a material is beyond its limit state as a result of deterioration, the code official can cite the condition as unsafe and require repair as needed (see Section 306.1.1).

[A] DWELLING UNIT. A single unit providing complete, independent living facilities for one or more persons, including permanent provisions for living, sleeping, eating, cooking and sanitation.

❖ A dwelling unit contains elements necessary for independent living, including provisions for living space (family rooms, dining rooms, living rooms, dens, etc.); sleeping quarters; food preparation and eating spaces; and personal hygiene, cleanliness and sanitation facilities. Section 404 establishes minimum room sizes. Minimum required levels of light and ventilation are included in Sections 402 and 403, respectively.

A dwelling unit is typically occupied in one of two ways: either through renting or ownership. The code requirements are applied consistently to all dwellings, regardless of the type of ownership. Both owner-occupied and rented or leased dwellings must comply with the requirements of the code.

A dwelling unit can exist singularly as a one-family dwelling, or in combination with other dwelling units. When two dwelling units are grouped together in the same structure, the structure is considered a two-family dwelling. Apartment houses contain three or more dwelling units.

[Z] EASEMENT. That portion of land or property reserved for present or future use by a person or agency other than the legal fee *owner*(s) of the property. The *easement* shall be permitted to be for use under, on or above said lot or lots.

❖ Easements are important mechanisms that allow a local municipality's workers access to buried utilities, such as telephone and electric. Easements also allow access to property that would have otherwise been rendered landlocked or inaccessible. It is important to note and restrict permanent improvements that limit required access across these easements. For example, a fence without a gate erected by a neighboring property owner that would deny entrance to an electrical transformer.

EQUIPMENT SUPPORT. Those structural members or assemblies of members or manufactured elements, including braces, frames, lugs, snuggers, hangers or saddles, that transmit gravity load, lateral load and operating load between the equipment and the structure.

❖ This definition describes the term "equipment support" for use in determining unsafe conditions related to structural materials, used to support equipment, that may be beyond their limit state. "Limit state" is a condition beyond which a structure or member becomes unfit for service and is no longer useful for its intended function. Where it is apparent that equipment-supporting material is beyond its limit state, the code official can cite the condition as unsafe and require repair as needed (see Section 306.1).

EXTERIOR PROPERTY. The open space on the *premises* and on adjoining property under the control of *owners* or *operators* of such *premises*.

❖ Exterior property generally consists of the open space or area outside a building or an accessory structure on the same premises or property. It is often referred to as "the yard area," but can also include driveways, parking areas, portions of the public right-of-way, vacant lots or adjoining property under the control of the same owner.

GARBAGE. The animal or vegetable waste resulting from the handling, preparation, cooking and consumption of food.

❖ Garbage is discarded food waste and differs from rubbish (see the definition of "Rubbish") in that it provides a food source for rodents and other animals and insects. Garbage that is not properly handled and disposed of regularly can cause unsanitary conditions and infestations of many types that could be the cause of illness in people and pets. Durable garbage containers with tight-fitting lids offer the best protection against these conditions.

[BE] GUARD. A building component or a system of building components located at or near the open sides of elevated walking surfaces that minimizes the possibility of a fall from the walking surface to a lower level.

❖ This is a term common to the IBC and IRC. Guards are sometimes mistakenly referred to as "guardrails." In actuality, the guard consists of the entire vertical portion of the barrier, not just the top rail. The purpose of guards is to minimize the potential for falls at dropoffs adjacent to walking surfaces.

[BG] HABITABLE SPACE. Space in a structure for living, sleeping, eating or cooking. *Bathrooms*, *toilet rooms*, closets, halls, storage or utility spaces, and similar areas are not considered *habitable spaces*.

❖ Habitable spaces are those spaces that are normally considered "inhabited" in the course of residential liv-

INTERNATIONAL CODE COUNCIL®
Copyright © 2018 ICC. ALL RIGHTS RESERVED. Accessed by Jim Davis (JDavis@ShakopeeMN.gov), (City of Shakopee) Order Number #101054067 on Mar 17, 2021 01:42 PM (PDT) pursuant to License Agreement with ICC. No further reproduction, no further reproductions by any third party, or distribution authorized. Single user only, copying and networking prohibited. ANY UNAUTHORIZED REPRODUCTION OR DISTRIBUTION IS A VIOLATION OF THE FEDERAL COPYRIGHT ACT AND THE LICENSE AGREEMENT, AND SUBJECT TO CIVIL AND CRIMINAL PENALTIES THEREUNDER.

101054067

ing and accommodate the four basic activities of living, sleeping, eating and cooking. Other spaces, such as halls or utility rooms, are not considered habitable, but would, in many instances, be considered occupiable spaces.

[A] HISTORIC BUILDING. Any building or structure that is one or more of the following:

1. Listed or certified as eligible for listing, by the State Historic Preservation Officer or the Keeper of the National Register of Historic Places, in the National Register of Historic Places.
2. Designated as historic under an applicable state or local law.
3. Certified as a contributing resource within a National Register or state or locally designated historic district.

❖ The definition gives specificity as to how a building is officially determined to be eligible for the various lists of historic buildings. In accordance with the Code of Federal Regulations, Title 36, Chapter I, Part 63, determinations of eligibility for listing in the National Register of Historic Places are made by State Historic Preservation Offices in coordination with the Keeper of the National Register of Historic Places. This is an official process conducted in accordance with federal standards. This definition aligns the code language with the language of this official process and removes any ambiguity as to who can make determinations of eligibility.

HOUSEKEEPING UNIT. A room or group of rooms forming a single *habitable space* equipped and intended to be used for living, sleeping, cooking and eating that does not contain, within such a unit, a toilet, lavatory and bathtub or shower.

❖ Housekeeping units differ from a traditional dwelling unit, as defined in the IRC, in that the sanitary facilities are not contained within the unit.

IMMINENT DANGER. A condition that could cause serious or life-threatening injury or death at any time.

❖ As used in the code, imminent danger refers to a condition that poses a threat or danger to the building occupants or persons in the proximity of a building or premises. Section 109 empowers the code official to vacate an occupied premises, order the closing of streets or take other emergency measures to safeguard the public until the condition is no longer threatening.

INFESTATION. The presence, within or contiguous to, a structure or *premises* of insects, rodents, vermin or other pests.

❖ This definition is needed for the application of Sections 302.5 and 309.1. An infestation is the actual presence of live insects, rodents, vermin or other pests. If the actual presence of pests cannot be readily confirmed, the presence of fresh droppings, larvae, eggs, rodent holes or other such evidence can identify a current infestation.

INOPERABLE MOTOR VEHICLE. A vehicle that cannot be driven upon the public streets for reason including but not limited to being unlicensed, wrecked, abandoned, in a state of disrepair, or incapable of being moved under its own power.

❖ Motor vehicles that are in some stage of disrepair or disassembly are often the source of property maintenance complaints. This definition clearly identifies that vehicles that are unlicensed, wrecked, abandoned, in a state of disrepair or incapable of moving under their own power are inoperable.

[A] LABELED. Equipment, materials or products to which have been affixed a label, seal, symbol or other identifying mark of a nationally recognized testing laboratory, *approved* agency or other organization concerned with product evaluation that maintains periodic inspection of the production of the above-*labeled* items and whose labeling indicates either that the equipment, material or product meets identified standards or has been tested and found suitable for a specified purpose.

❖ When a product is labeled, the label indicates that the material has been tested for conformance to an applicable standard or has been determined suitable for a specified purpose, and that the component is subject to third-party inspection to verify that the minimum level of quality required by the appropriate standard is maintained. Labeling provides a readily available source of information that is useful for field inspection of installed products. The label identifies the product or material and provides other information that can be further investigated if there is any question as to its suitability for the specific installation. The labeling agency performing the third-party inspection must be approved by the code official. The basis for approval may include, but is not necessarily limited to, the capacity and capability of the agency to perform the specific testing and inspection.

While the code does not specifically state what information must be contained on the label, the applicable referenced standard often states the minimum identifying information required. The data contained on a label typically includes, but is not necessarily limited to, the name of the manufacturer; product name or serial number; installation specifications; applicable tests and standards; the testing agency; and the labeling agency.

LET FOR OCCUPANCY or LET. To permit, provide or offer possession or *occupancy* of a dwelling, *dwelling unit*, *rooming unit*, building, premise or structure by a person who is or is not the legal *owner* of record thereof, pursuant to a written or unwritten lease, agreement or license, or pursuant to a recorded or unrecorded agreement of contract for the sale of land.

❖ This definition refers to a legal term meaning to lease or convey real estate or property to someone other than the owners.

NEGLECT. The lack of proper maintenance for a building or *structure*.

❖ This definition describes the term "neglect" for use in determining if a structure or premises is dangerous in accordance with Section 108.1.5. Where it is appar-

INTERNATIONAL CODE COUNCIL®

Copyright © 2018 ICC. ALL RIGHTS RESERVED. Accessed by Jim Davis (JDavis@ShakopeeMN.gov), (City of Shakopee) Order Number #101054067 on Mar 17, 2021 01:42 PM (PDT) pursuant to License Agreement with ICC. No further reproduction, no further reproductions by any third party, or distribution authorized. Single user only, copying and networking prohibited. ANY UNAUTHORIZED REPRODUCTION OR DISTRIBUTION IS A VIOLATION OF THE FEDERAL COPYRIGHT ACT AND THE LICENSE AGREEMENT, AND SUBJECT TO CIVIL AND CRIMINAL PENALTIES THEREUNDER.

101054067

ent that a structure or premises is dangerous due to neglect, the code official can cite the condition as unsafe and require repair as needed.

[A] OCCUPANCY. The purpose for which a building or portion thereof is utilized or occupied.

❖ The occupancy classification of a building is an indication of the level of hazard to which the occupants are exposed as a function of the actual building use. Occupancy, in terms of an occupancy group classification, is one of the primary considerations in the development and application of many code requirements designed to offset specific hazards inherent to each occupancy group. In enforcing the code, the approved occupancy of the building is generally an established fact.

OCCUPANT. Any individual living or sleeping in a building, or having possession of a space within a building.

❖ By definition, a person need not have possession or control of a space in order to be an occupant.

OPENABLE AREA. That part of a window, skylight or door which is available for unobstructed *ventilation* and which opens directly to the outdoors.

❖ The openable area is the actual area of a window or door (glazed or unglazed) through which outside air will flow into a structure. The openable area should be measured when the window or door is in its full, open position. When determining openable area, only the space between stops or between stops and sashes is to be measured. The area of sashes, meeting rails, mullions and muntins is to be deducted (see Figure 403.1).

OPERATOR. Any person who has charge, care or control of a structure or *premises* that is let or offered for *occupancy*.

❖ This definition is needed to distinguish the unique meaning of this term, as it is intended to be used in the code, from the ordinarily accepted meaning of the term "operator." An operator may not be the owner, but may represent the owner in the care or control of a structure.

[A] OWNER. Any person, agent, *operator*, firm or corporation having legal or equitable interest in the property; or recorded in the official records of the state, county or municipality as holding title to the property; or otherwise having control of the property, including the guardian of the estate of any such person, and the executor or administrator of the estate of such person if ordered to take possession of real property by a court.

❖ This term defines the person or other legal entity responsible for a building and its compliance with code requirements.

[A] PERSON. An individual, corporation, partnership or any other group acting as a unit.

❖ A person can be an individual or group of individuals who have formed one of several types of business organizations. Corporations, partnerships and other types of business entities are treated as "persons" under the law. They are just as responsible as any individual for complying with the code and subject to the penalties established under local or state law (see Section 106.4).

PEST ELIMINATION. The control and elimination of insects, rodents or other pests by eliminating their harborage places; by removing or making inaccessible materials that serve as their food or water; by other *approved pest elimination* methods.

❖ This definition is needed since Section 309 requires the use of approved pest elimination methods that are not harmful to people.

[A] PREMISES. A lot, plot or parcel of land, *easement* or *public way*, including any structures thereon.

❖ When this term is used in the code, it is intended that the entire lot and all of the structures thereon be included within the scope of that code requirement.

[A] PUBLIC WAY. Any street, alley or other parcel of land that: is open to the outside air; leads to a street; has been deeded, dedicated or otherwise permanently appropriated to the public for public use; and has a clear width and height of not less than 10 feet (3048 mm).

❖ This term describes the ground on which the public will be allowed passage.

ROOMING HOUSE. A building arranged or occupied for lodging, with or without meals, for compensation and not occupied as a one- or two-family dwelling.

❖ A rooming house provides shelter and sleeping arrangements for individuals. This differs from other living arrangements in that the occupant shares a dwelling unit rather than having his or her own complete and private dwelling unit. Each person rents individually from the owner and does not occupy the structure as part of a family. In most cases, occupants share a bathroom and cooking facilities. Another term that could be used is "boarding house," and it would be classified as an Occupancy Group R-1 or R-2, depending on the permanent or transient nature of the occupants.

ROOMING UNIT. Any room or group of rooms forming a single habitable unit occupied or intended to be occupied for sleeping or living, but not for cooking purposes.

❖ Rooming units differ from dwelling units since no cooking facilities are located in any rooming unit. Rooming units contain only sleeping and living facilities.

RUBBISH. Combustible and noncombustible waste materials, except garbage; the term shall include the residue from the burning of wood, coal, coke and other combustible materials, paper, rags, cartons, boxes, wood, excelsior, rubber, leather, tree branches, *yard* trimmings, tin cans, metals, mineral matter, glass, crockery and dust and other similar materials.

❖ The term is usually considered to be a synonym for similar terms such as "refuse" or "trash" and generally encompasses the broad range of worthless, discarded materials other than garbage. The term "garbage" is typically limited to describing wastes generated by food preparation operations.

INTERNATIONAL CODE COUNCIL®
Copyright © 2018 ICC. ALL RIGHTS RESERVED. Accessed by Jim Davis (JDavis@ShakopeeMN.gov), (City of Shakopee) Order Number #101054067 on Mar 17, 2021 01:42 PM (PDT) pursuant to License Agreement with ICC. No further reproduction, no further reproductions by any third party, or distribution authorized. Single user only, copying and networking prohibited. ANY UNAUTHORIZED REPRODUCTION OR DISTRIBUTION IS A VIOLATION OF THE FEDERAL COPYRIGHT ACT AND THE LICENSE AGREEMENT, AND SUBJECT TO CIVIL AND CRIMINAL PENALTIES THEREUNDER.

101054067

[A] SLEEPING UNIT. A room or space in which people sleep, which can also include permanent provisions for living, eating and either sanitation or kitchen facilities, but not both. Such rooms and spaces that are also part of a *dwelling unit* are not *sleeping units*.

❖ This definition is included to coordinate the *Fair Housing Accessibility Guidelines* with the code. The definition for "Sleeping unit" is needed to clarify the differences between sleeping units and dwelling units. Examples include a hotel guestroom, a dormitory and a boarding house. Another example is an addition to a studio apartment with a kitchenette (i.e., microwave, sink, and refrigerator). Since the cooking arrangements are not permanent, this configuration is considered a sleeping unit, not a dwelling unit. As already defined in the code, a dwelling unit must contain permanent facilities for living, sleeping, eating, cooking and sanitation.

STRICT LIABILITY OFFENSE. An offense in which the prosecution in a legal proceeding is not required to prove criminal intent as a part of its case. It is enough to prove that the defendant either did an act which was prohibited, or failed to do an act which the defendant was legally required to do.

❖ This term, along with its usage in Section 106.3, brings the code in line with current legal terminology in regard to the prosecution of violations. With this term, a prosecutor is not required to prove that code violations were intended by a defendant or were even due to negligence. It is difficult to prove such intention or negligence in a court of law.

[A] STRUCTURE. That which is built or constructed.

❖ This definition is intentionally broad so as to include within its scope, and therefore the scope of the code (see Section 101.2), everything that is built as an improvement to real property.

TENANT. A person, corporation, partnership or group, whether or not the legal *owner* of record, occupying a building or portion thereof as a unit.

❖ This definition parallels that of the term "occupant" and makes it clear that, as used in the code, an owner-occupant is considered a tenant.

TOILET ROOM. A room containing a water closet or urinal but not a bathtub or shower.

❖ In the context of the code, a toilet room is a room that contains plumbing fixtures used for elimination of bodily wastes (water closets and urinals) and also includes fixtures used for handwashing (lavatories). Toilet rooms are typically associated with public occupancies. Although sometimes used interchangeably with the term "bathroom" (see the definition of "Bathroom"), a toilet room contains only those plumbing fixtures designed for waste elimination and handwashing. A toilet room becomes a bathroom when it contains a bathtub or shower.

ULTIMATE DEFORMATION. The deformation at which failure occurs and that shall be deemed to occur if the sustainable load reduces to 80 percent or less of the maximum strength.

❖ This definition describes the term "ultimate deformation" for use in determining unsafe conditions related to structural materials that may be beyond their limit state due to ultimate deformation. "Limit state" is a condition beyond which a structure or member becomes unfit for service and is no longer useful for its intended function. Where it is apparent that a material is beyond its limit state due to ultimate deformation, the code official can cite the condition as unsafe and require repair as needed (see Section 306.1.1).

[M] VENTILATION. The natural or mechanical process of supplying conditioned or unconditioned air to, or removing such air from, any space.

❖ Ventilation is the process of moving air to or from building spaces. This definition is used in this chapter to establish minimum levels of air movement within a building for the purposes of providing a healthful interior environment. Ventilation would include both natural (openable exterior windows and doors for wind movement) and mechanical (forced air with mechanical equipment) methods, when permitted by the code.

WORKMANLIKE. Executed in a skilled manner; e.g., generally plumb, level, square, in line, undamaged and without marring adjacent work.

❖ To be workmanlike, maintenance or repair work must be performed in a manner consistent with work done by a skilled craftsman. In general, floors should be level, walls plumb and square and windows installed so that they operate easily and fit within the rough opening to exclude the elements. The use of proper tools, methods and materials is usually necessary for workmanlike repairs.

[Z] YARD. An open space on the same lot with a structure.

❖ "Yard" is similar to "exterior property" but pertains only to the open area on a lot with a structure. A vacant lot or property without a structure does not have a yard by this definition.

Bibliography

The following resource materials were used in the preparation of the commentary for this chapter of the code:

IBC—2018, *International Building Code*. Washington, DC: International Code Council, 2017.

IEBC—2018, *International Existing Building Code*. Washington, DC: International Code Council, 2017.

IFC—2018, *International Fire Code*. Washington, DC: International Code Council, 2017.

IFGC—2018, *International Fuel Gas Code*. Washington, DC: International Code Council, 2017.

INTERNATIONAL CODE COUNCIL®

Copyright © 2018 ICC. ALL RIGHTS RESERVED. Accessed by Jim Davis (JDavis@ShakopeeMN.gov), (City of Shakopee) Order Number #101054067 on Mar 17, 2021 01:42 PM (PDT) pursuant to License Agreement with ICC. No further reproduction, no further reproductions by any third party, or distribution authorized. Single user only, copying and networking prohibited. ANY UNAUTHORIZED REPRODUCTION OR DISTRIBUTION IS A VIOLATION OF THE FEDERAL COPYRIGHT ACT AND THE LICENSE AGREEMENT, AND SUBJECT TO CIVIL AND CRIMINAL PENALTIES THEREUNDER.

101054067

IMC—2018, *International Mechanical Code*. Washington, DC: International Code Council, 2017.

IPC—2018, *International Plumbing Code*. Washington, DC: International Code Council, 2017.

IRC—2018, *International Residential Code*. Washington, DC: International Code Council, 2017.

IZC—2018, *International Zoning Code*. Washington, DC: International Code Council, 2017.

INTERNATIONAL CODE COUNCIL®

Copyright © 2018 ICC. ALL RIGHTS RESERVED. Accessed by Jim Davis (JDavis@ShakopeeMN.gov), (City of Shakopee) Order Number #101054067 on Mar 17, 2021 01:42 PM (PDT) pursuant to License Agreement with ICC. No further reproduction, no further reproductions by any third party, or distribution authorized. Single user only, copying and networking prohibited. ANY UNAUTHORIZED REPRODUCTION OR DISTRIBUTION IS A VIOLATION OF THE FEDERAL COPYRIGHT ACT AND THE LICENSE AGREEMENT, AND SUBJECT TO CIVIL AND CRIMINAL PENALTIES THEREUNDER.

101054067

INTERNATIONAL CODE COUNCIL®

Copyright © 2018 ICC. ALL RIGHTS RESERVED. Accessed by Jim Davis (JDavis@ShakopeeMN.gov), (City of Shakopee) Order Number #101054067 on Mar 17, 2021 01:42 PM (PDT) pursuant to License Agreement with ICC. No further reproduction, no further reproductions by any third party, or distribution authorized. Single user only, copying and networking prohibited. ANY UNAUTHORIZED REPRODUCTION OR DISTRIBUTION IS A VIOLATION OF THE FEDERAL COPYRIGHT ACT AND THE LICENSE AGREEMENT, AND SUBJECT TO CIVIL AND CRIMINAL PENALTIES THEREUNDER.

101054067

Chapter 3: General Requirements

General Comments

The title for Chapter 3 ("General Requirements") indicates that it is broad in scope. It includes a variety of requirements for exterior property areas, as well as interior and exterior elements of the structure. Chapter 3 provides specific criteria for regulating the installation and maintenance of building components. This chapter also contains requirements regulating the safety, sanitation and appearance of the interior and exterior of structures and all exterior property areas.

Section 301 identifies the scope of Chapter 3 as containing provisions for maintaining a structure and its exterior property areas, and establishes who is responsible for complying with the chapter's provisions. This section also provides minimum maintenance requirements for vacant structures and land.

Section 302 establishes criteria for maintaining exterior property areas and accessory structures and provides vehicle storage regulations.

Section 303 contains the requirements for swimming pools, spas, hot tubs, protective barriers and gates in these barriers.

Section 304 establishes maintenance requirements for the structural, weather resistance, sanitary and safety performance of the exterior of a structure.

Section 305 establishes maintenance requirements for the structural, sanitary and safety performance of the interior of a structure.

Section 306 contains provisions for maintaining components of a structure, as well as for determining unsafe conditions based on specific parameters.

Section 307 provides for the safety and maintenance of handrails and guardrails.

Sections 308 and 309 establish the responsible parties for exterminating insects and rodents, and maintaining sanitary conditions in various types of occupancies. When specific requirements are not provided in the code, the following three options for establishing the necessary criteria are available:

1. If the jurisdiction has already established criteria, the code official can continue to enforce that criteria.
2. The jurisdiction may adopt its own criteria and incorporate them as an amendment to the appropriate section of the code.
3. The code official may adopt and enforce criteria already established by the *International Building Code*® (IBC®).

Inadequate sanitation and insect or rodent infestations can have a significant impact on a community. A poorly kept neighborhood affects the self-image of a community, as well as the impression neighboring communities and visitors have about the area. Responsible property owners may shy away from neighborhoods that look unkempt. As a result, property values decrease and the cycle can continue until the neighborhood is considered a slum.

An area that is neat, clean and well maintained attracts owners and occupants who are usually willing to keep the area attractive, if only to protect their own interests. The code official, with vigorous enforcement of sanitation and extermination regulations, can help a community maintain a positive self-image. This creates a favorable image to the rest of the community and its visitors.

Purpose

Chapter 3 provides requirements that are intended to maintain a minimum level of safety and sanitation for both the general public and the occupants of a structure, and to maintain a building's structural and weather-resistant performance.

SECTION 301
GENERAL

301.1 Scope. The provisions of this chapter shall govern the minimum conditions and the responsibilities of persons for maintenance of structures, equipment and *exterior property*.

❖ This chapter establishes minimum requirements for maintenance of property areas, premises and structures. The code deals with all types and all ages of structures; therefore, the criteria must be of a minimum nature, consistent with a reasonable level of protection for the health and safety of the occupants.

301.2 Responsibility. The *owner* of the *premises* shall maintain the structures and *exterior property* in compliance with these requirements, except as otherwise provided for in this code. A person shall not occupy as owner-occupant or permit another person to occupy *premises* that are not in a sanitary and safe condition and that do not comply with the requirements of this chapter. *Occupants* of a *dwelling unit*, *rooming unit* or *housekeeping unit* are responsible for keeping in a

INTERNATIONAL CODE COUNCIL®
Copyright © 2018 ICC. ALL RIGHTS RESERVED. Accessed by Jim Davis (JDavis@ShakopeeMN.gov), (City of Shakopee) Order Number #101054067 on Mar 17, 2021 01:42 PM (PDT) pursuant to License Agreement with ICC. No further reproduction, no further reproductions by any third party, or distribution authorized. Single user only, copying and networking prohibited. ANY UNAUTHORIZED REPRODUCTION OR DISTRIBUTION IS A VIOLATION OF THE FEDERAL COPYRIGHT ACT AND THE LICENSE AGREEMENT, AND SUBJECT TO CIVIL AND CRIMINAL PENALTIES THEREUNDER.

101054067

clean, sanitary and safe condition that part of the *dwelling unit*, *rooming unit*, *housekeeping unit* or *premises* they occupy and control.

❖ The owner is responsible for complying with the requirements of Chapter 3, except where the code places the responsibility on the occupants to keep their portion of the premises in a safe and sanitary condition.

Simply stated, owners must provide a safe and sanitary property and premises when they let it for occupancy. Occupants must continue to keep it safe and sanitary while they occupy, control or use the property and premises.

301.3 Vacant structures and land. Vacant structures and *premises* thereof or vacant land shall be maintained in a clean, safe, secure and sanitary condition as provided herein so as not to cause a blighting problem or adversely affect the public health or safety.

❖ Both vacant structures and vacant land present special concerns to communities. Because no one is living on these premises, they are often ignored by the owners. Consequently, this section establishes the code official's authority to order the cleanup of vacant lands and the securing of vacant structures that might present an attractive nuisance.

When the owner fails to secure a vacant structure, Section 108.2 provides the code official with the authority to arrange for securing such buildings. Additionally, Section 110 authorizes the code official to pursue demolition of any structure that is deemed unreasonable to repair. When a structure is reasonable to repair, the code official is authorized to require the necessary repairs.

SECTION 302
EXTERIOR PROPERTY AREAS

302.1 Sanitation. *Exterior property* and *premises* shall be maintained in a clean, safe and sanitary condition. The *occupant* shall keep that part of the *exterior property* that such *occupant* occupies or controls in a clean and sanitary condition.

❖ This section establishes a simple, straightforward requirement that exterior areas shall be clean and free from rubbish and garbage (see the definitions in Chapter 2). The code official may find that enforcement of this section is frequently neither straightforward nor simple.

Each jurisdiction has neighborhoods within the overall community that have distinct characteristics. Deteriorated, low-cost housing may dominate in one area, while another has expensive, well-maintained housing units. Sanitation standards should be enforced uniformly and consistently.

302.2 Grading and drainage. *Premises* shall be graded and maintained to prevent the erosion of soil and to prevent the accumulation of stagnant water thereon, or within any structure located thereon.

Exception: *Approved* retention areas and reservoirs.

❖ Improperly graded property areas create health and safety hazards. Stagnant water provides a home for many nuisance insects, especially the mosquito. Stagnant water next to a structure can cause mold growth, which can lead to the decay of wooden members. Ponded water is an attractive nuisance for children and has contributed to numerous drowning deaths.

Stagnant water is foul or stale water. Regrading the premises may be necessary to prevent stagnant water. If regrading is not practical, some type of water-diversion system must be installed. Other solutions include replacing nonabsorbent soil with absorbent soil, installing underground drain tile or building an underground leaching pit.

Soil erosion can be a nuisance if material is being deposited in drainage systems or on adjacent properties, and is an indication of improper grading. Planting and maintaining an acceptable ground cover generally prevents erosion.

As indicated by the exception, water retention areas or reservoirs are permitted by the code even though they may contain stagnant water; however, the code official must approve their use.

302.3 Sidewalks and driveways. Sidewalks, walkways, stairs, driveways, parking spaces and similar areas shall be kept in a proper state of repair, and maintained free from hazardous conditions.

❖ The code official is authorized to require that all sidewalks, walkways, stairs, driveways, parking spaces, etc., are usable and kept in proper repair. Walking surfaces that have deteriorated to a condition that presents a hazard to pedestrians must be repaired or replaced to eliminate the hazard and thus reduce the potential for accidents or injuries.

302.4 Weeds. *Premises* and *exterior property* shall be maintained free from weeds or plant growth in excess of **[JURISDICTION TO INSERT HEIGHT IN INCHES]**. Noxious weeds shall be prohibited. Weeds shall be defined as all grasses, annual plants and vegetation, other than trees or shrubs provided; however, this term shall not include cultivated flowers and gardens.

Upon failure of the *owner* or agent having charge of a property to cut and destroy weeds after service of a notice of violation, they shall be subject to prosecution in accordance with Section 106.3 and as prescribed by the authority having jurisdiction. Upon failure to comply with the notice of violation, any duly authorized employee of the jurisdiction or con-

INTERNATIONAL CODE COUNCIL®
Copyright © 2018 ICC. ALL RIGHTS RESERVED. Accessed by Jim Davis (JDavis@ShakopeeMN.gov), (City of Shakopee) Order Number #101054067 on Mar 17, 2021 01:42 PM (PDT) pursuant to License Agreement with ICC. No further reproduction, no further reproductions by any third party, or distribution authorized. Single user only, copying and networking prohibited. ANY UNAUTHORIZED REPRODUCTION OR DISTRIBUTION IS A VIOLATION OF THE FEDERAL COPYRIGHT ACT AND THE LICENSE AGREEMENT, AND SUBJECT TO CIVIL AND CRIMINAL PENALTIES THEREUNDER.

101054067

tractor hired by the jurisdiction shall be authorized to enter upon the property in violation and cut and destroy the weeds growing thereon, and the costs of such removal shall be paid by the *owner* or agent responsible for the property.

❖ Criteria establishing maximum heights for grass and weeds are necessary to reduce rodent shelters and pollen dust problems.

This section provides a mechanism for removal of weeds on neglected or abandoned properties after proper notice has been given to the responsible owner or agent (see Sections 107 and 108.3). It is important that the code official acts quickly in requiring weed removal to prevent the weeds from contributing to a blight condition that could eventually become a harbor for pests and rodents.

All noxious weeds are prohibited; however, each community has different weeds that are considered noxious. The code official should confer with the state or local agricultural agent to become familiar with weeds that are noxious in his or her community.

Cultivated flowers and gardens are not considered to be weeds. The word "cultivated" is important. Cultivated is defined as "to loosen or dig (soil) around growing plants." Uncultivated gardens should be treated the same as weeds and tall grasses.

302.5 Rodent harborage. Structures and *exterior property* shall be kept free from rodent harborage and *infestation*. Where rodents are found, they shall be promptly exterminated by *approved* processes that will not be injurious to human health. After pest elimination, proper precautions shall be taken to eliminate rodent harborage and prevent reinfestation.

❖ Rodents carry disease organisms in their feces and on their bodies. The code official must require the extermination of all rodents by approved processes. All harborage areas should be eliminated by removing piles of rubbish, towing or repairing inoperable cars and cutting back weeds. Garbage should be stored in solid containers with tight-fitting lids and disposed of regularly.

302.6 Exhaust vents. Pipes, ducts, conductors, fans or blowers shall not discharge gases, steam, vapor, hot air, grease, smoke, odors or other gaseous or particulate wastes directly on abutting or adjacent public or private property or that of another *tenant*.

❖ There are three common problems associated with exhaust vent discharges:

- Odor problems caused from exhaust gases emanating from business and industrial properties.
- Noise problems created by exhaust vents.
- Health and safety problems created by exhausts that contain hazardous or potentially hazardous discharge.

To reduce these problems, exhaust vents are prohibited from discharging directly on abutting or adjacent public and private property.

302.7 Accessory structures. Accessory structures, including *detached* garages, fences and walls, shall be maintained structurally sound and in good repair.

❖ Accessory structures must be maintained in accordance with the criteria established by this section. Property owners often give detached garages, sheds, fences, retaining walls and similar structures a lower maintenance priority than the primary structure; thus, these structures are more frequently in disrepair. A thorough inspection of all property areas and accessory buildings is necessary to identify violations of the code and to improve a neighborhood's appearance.

302.8 Motor vehicles. Except as provided for in other regulations, inoperative or unlicensed motor vehicles shall not be parked, kept or stored on any *premises*, and vehicles shall not at any time be in a state of major disassembly, disrepair, or in the process of being stripped or dismantled. Painting of vehicles is prohibited unless conducted inside an *approved* spray booth.

Exception: A vehicle of any type is permitted to undergo major overhaul, including body work, provided that such work is performed inside a structure or similarly enclosed area designed and *approved* for such purposes.

❖ Improper storage of inoperable vehicles can be a serious problem for a community. The vehicles are unsightly, clutter the neighborhood, provide a harborage for rodents and are an attractive nuisance for children.

This section establishes criteria for acceptable vehicle storage. No inoperable or unlicensed vehicles are permitted on a property unless approved in other regulations adopted by the community. This regulation addresses two problems associated with vehicle storage and repair:

- The blighting influence that improperly stored, inoperable vehicles have on a neighborhood.
- The neighborhood mechanic who attempts to operate a vehicle repair business from home.

Major vehicle repairs are permitted, but only if the work is performed in a structure designed and approved for such use. Of course, this regulation does not affect the storage of vehicles on property that complies with applicable zoning or license requirements, such as repair garages, salvage yards and similar establishments.

302.9 Defacement of property. A person shall not willfully or wantonly damage, mutilate or deface any exterior surface of any structure or building on any private or public property by placing thereon any marking, carving or graffiti.

It shall be the responsibility of the *owner* to restore said surface to an *approved* state of maintenance and repair.

❖ Graffiti, carving and damage are problems that plague exterior surfaces of walls, fencing and sidewalks in cities and towns of all sizes. This problem begins as an eyesore and can result in serious consequences, including declining property values and degradation of the structures' ability to repel rain and snow.

INTERNATIONAL CODE COUNCIL®
Copyright © 2018 ICC. ALL RIGHTS RESERVED. Accessed by Jim Davis (JDavis@ShakopeeMN.gov), (City of Shakopee) Order Number #101054067 on Mar 17, 2021 01:42 PM (PDT) pursuant to License Agreement with ICC. No further reproduction, no further reproductions by any third party, or distribution authorized. Single user only, copying and networking prohibited. ANY UNAUTHORIZED REPRODUCTION OR DISTRIBUTION IS A VIOLATION OF THE FEDERAL COPYRIGHT ACT AND THE LICENSE AGREEMENT, AND SUBJECT TO CIVIL AND CRIMINAL PENALTIES THEREUNDER.

101054067

It is the responsibility of the owner to restore said surface to an approved state of maintenance and repair.

SECTION 303
SWIMMING POOLS, SPAS AND HOT TUBS

303.1 Swimming pools. Swimming pools shall be maintained in a clean and sanitary condition, and in good repair.

❖ Swimming pools, if neglected, can become a health hazard, resulting in insect-attracting stagnant water.

303.2 Enclosures. Private swimming pools, hot tubs and spas, containing water more than 24 inches (610 mm) in depth shall be completely surrounded by a fence or barrier not less than 48 inches (1219 mm) in height above the finished ground level measured on the side of the barrier away from the pool. Gates and doors in such barriers shall be self-closing and self-latching. Where the self-latching device is less than 54 inches (1372 mm) above the bottom of the gate, the release mechanism shall be located on the pool side of the gate. Self-closing and self-latching gates shall be maintained such that the gate will positively close and latch when released from an open position of 6 inches (152 mm) from the gatepost. An existing pool enclosure shall not be removed, replaced or changed in a manner that reduces its effectiveness as a safety barrier.

Exception: Spas or hot tubs with a safety cover that complies with ASTM F1346 shall be exempt from the provisions of this section.

❖ This performance-based criteria was specifically added to address pool-related problems where a child could possibly drown by gaining entry into a pool through a gate that failed to close and latch properly. Gates that may have deteriorated over time through age, wear and exposure to the elements are now addressed so that they will continue to provide the intended level of protection. The exception to this section allows for safety covers that comply with ASTM F1346. This exception is consistent with current provisions in the IBC and the *International Residential Code*® (IRC®).

ASTM F1346 requires fastening the safety cover to the hot tub or spa via key locks, combination locks or similar devices that will keep the cover in place; testing to demonstrate that the cover can support a minimum required weight; limitations on openings in the cover; and minimum installation requirements.

SECTION 304
EXTERIOR STRUCTURE

304.1 General. The exterior of a structure shall be maintained in good repair, structurally sound and sanitary so as not to pose a threat to the public health, safety or welfare.

❖ The exterior of structures must perform four primary functions:

- It must be in good repair. There should be no evidence of deterioration, or damaged or loose elements.
- It must be structurally sound. There should not be any loose or collapsing pieces. Stairways, porches, balconies and similar structural elements must safely perform their intended functions.
- It must be kept in a sanitary condition. There shall be no accumulation of litter or debris on porches and other parts of the exterior structure.
- It must be capable of preventing the elements (rain, snow and wind) and rodents from entering the interior areas.

304.1.1 Unsafe conditions. The following conditions shall be determined as unsafe and shall be repaired or replaced to comply with the *International Building Code* or the *International Existing Building Code* as required for existing buildings:

1. The nominal strength of any structural member is exceeded by nominal loads, the load effects or the required strength.
2. The *anchorage* of the floor or roof to walls or columns, and of walls and columns to foundations is not capable of resisting all nominal loads or load effects.
3. Structures or components thereof that have reached their limit state.
4. Siding and masonry joints including joints between the building envelope and the perimeter of windows, doors and skylights are not maintained, weather resistant or water tight.
5. Structural members that have evidence of *deterioration* or that are not capable of safely supporting all nominal loads and load effects.
6. Foundation systems that are not firmly supported by footings, are not plumb and free from open cracks and breaks, are not properly *anchored* or are not capable of supporting all nominal loads and resisting all load effects.
7. Exterior walls that are not *anchored* to supporting and supported elements or are not plumb and free of holes, cracks or breaks and loose or rotting materials, are not properly *anchored* or are not capable of supporting all nominal loads and resisting all load effects.
8. Roofing or roofing components that have defects that admit rain, roof surfaces with inadequate drainage, or any portion of the roof framing that is not in good repair with signs of *deterioration*, fatigue or without proper anchorage and incapable of supporting all nominal loads and resisting all load effects.
9. Flooring and flooring components with defects that affect serviceability or flooring components that show signs of *deterioration* or fatigue, are not properly *anchored* or are incapable of supporting all nominal loads and resisting all load effects.
10. Veneer, cornices, belt courses, corbels, trim, wall facings and similar decorative features not properly anchored or that are anchored with connections not

INTERNATIONAL CODE COUNCIL®
Copyright © 2018 ICC. ALL RIGHTS RESERVED. Accessed by Jim Davis (JDavis@ShakopeeMN.gov), (City of Shakopee) Order Number #101054067 on Mar 17, 2021 01:42 PM (PDT) pursuant to License Agreement with ICC. No further reproduction, no further reproductions by any third party, or distribution authorized. Single user only, copying and networking prohibited. ANY UNAUTHORIZED REPRODUCTION OR DISTRIBUTION IS A VIOLATION OF THE FEDERAL COPYRIGHT ACT AND THE LICENSE AGREEMENT, AND SUBJECT TO CIVIL AND CRIMINAL PENALTIES THEREUNDER.

101054067

capable of supporting all nominal loads and resisting all load effects.

11. Overhang extensions or projections including, but not limited to, trash chutes, canopies, marquees, signs, awnings, fire escapes, standpipes and exhaust ducts not properly *anchored* or that are *anchored* with connections not capable of supporting all nominal loads and resisting all load effects.
12. Exterior stairs, decks, porches, balconies and all similar appurtenances attached thereto, including *guard*s and handrails, are not structurally sound, not properly *anchored* or that are *anchored* with connections not capable of supporting all nominal loads and resisting all load effects.
13. Chimneys, cooling towers, smokestacks and similar appurtenances not structurally sound or not properly *anchored,* or that are anchored with connections not capable of supporting all nominal loads and resisting all load effects.

Exceptions:

1. Where substantiated otherwise by an *approved* method.
2. Demolition of unsafe conditions shall be permitted where *approved* by the *code official*.

❖ The purpose of these requirements is to set out general and specific delineations in a building or structure that would make it unsafe. These delineations allow the code official more specific references to conditions that characterize an unsafe building or structure.

Section 304.1.1 describes in detail unsafe conditions related to the exterior of the structure to provide the code official the ability to require replacement or repair.

Item 1 indicates that if the strength of the structural member is exceeded by either the nominal loads or load effects, the condition is to be regarded as unsafe. Nominal loads and load effects, as defined by the IBC and Items 2–13 of this section, are when a structure or component is regarded as incapable of performing its intended function and thus becomes unsafe.

Item 2 deals with required strength of connections between structural members. More specifically, each connection must be able to resist nominal loads and load effects; otherwise, the building or affected portion thereof is to be regarded as unsafe. Anchorage of various elements of a structure is essential to its stability. When anchorage is not capable of transferring the intended loads, the structure or component is said to be unsafe.

Item 3 specifies that any condition beyond which a structure or member becomes unfit for service and is no longer useful for its intended function is to be unsafe. This includes its serviceability limit and strength limit state. “Limit state,” as defined by the IBC, is a condition beyond which a structure or member becomes unfit for service and is no longer useful for its intended function (serviceability limit state) or to be unsafe (strength limit state). Any structure reaching this state is said to be unsafe.

Since weather penetration can degrade structural components, Item 4 specifies that if any joint in the building envelope allows weather to penetrate, it may be used as a basis to classify the structure as unsafe. This may be, in and of itself, the basis for the classification. However, supporting evidence of deterioration caused by the penetration would add weight to the characterization as unsafe.

Item 5 addresses structural members. Structural members are essential to the structural integrity of any building. If any structural member is deteriorated to the point that it cannot safely support the nominal loads, the building may be regarded as unsafe.

Item 6 addresses foundations. Foundation systems are essential to the structural integrity of any building. If any portion of any foundation system is not supported by adequate soil, is not plumb as intended to distribute the loads, has cracks or breaks or is inadequately anchored, the building may be regarded as unsafe.

Item 7 addresses exterior walls. Exterior walls are essential to the structural integrity of any building. If any portion of any exterior or bearing wall system is not supported by adequate foundation, is not plumb as intended to distribute the loads, has cracks or breaks or is inadequately anchored, the building may be regarded as unsafe.

Item 8 addresses roofing and roofing components. Since weather penetration can degrade structural components, this section specifies that if any roof component allows weather to penetrate, it may be used as a basis to classify the structure as unsafe. This may be, in and of itself, the basis for the classification. However, supporting evidence of deterioration caused by the penetration would add weight to the characterization as unsafe. Additionally, any structural component of the roof assembly not capable of supporting design loads is a basis for classifying as unsafe.

Item 9 addresses flooring and flooring components. Walking surfaces in floors with fatigue, defects or deterioration are a basis for determining that a building or structure is unsafe. If a floor may collapse due to any of these conditions or is likely to cause harm or injury, it may be regarded as unsafe.

Item 10 addresses exterior wall facings. Decorative features either inside or outside that may become detached and fall is a basis for classifying a building or portion thereof as unsafe. Lateral movement, such as an earthquake or wind, may cause any feature such as this to fall if not secured properly.

Item 11 addresses overhangs and projections from a building. As with decorative features, any overhang, extension or projection (trash chutes, canopies, mar-

INTERNATIONAL CODE COUNCIL®
Copyright © 2018 ICC. ALL RIGHTS RESERVED. Accessed by Jim Davis (JDavis@ShakopeeMN.gov), (City of Shakopee) Order Number #101054067 on Mar 17, 2021 01:42 PM (PDT) pursuant to License Agreement with ICC. No further reproduction, no further reproductions by any third party, or distribution authorized. Single user only, copying and networking prohibited. ANY UNAUTHORIZED REPRODUCTION OR DISTRIBUTION IS A VIOLATION OF THE FEDERAL COPYRIGHT ACT AND THE LICENSE AGREEMENT, AND SUBJECT TO CIVIL AND CRIMINAL PENALTIES THEREUNDER.

101054067

quees, signs, etc.) that is not anchored properly and can fall is a basis for declaring that an unsafe condition exists.

Item 12 addresses exterior stairs, decks and similar appurtenances. Exterior stairs, decks, porches, balconies and all similar appurtenances are all portions of a means of egress system and as such represent a significant safety concern if left in an unsafe condition. Should any of these elements of a means of egress system become structurally unsound, the building or portion thereof may be regarded as unsafe.

Item 13 addresses chimneys, cooling towers and similar appurtenances. As with decorative features and other appurtenances, chimneys, cooling towers, smokestacks or similar large vertical elements that become structurally unsound may be regarded as unsafe.

Exception 1 is to recognize that a qualified entity could substantiate an alternative method or material that meets the purpose and intent of the code. This alternative would need to be approved by the code official. An engineering study that substantiates the structural integrity in a rational analysis may be the basis for accepting a contention that the building is not unsafe.

Exception 2 allows a building owner the option of demolition of an unsafe condition subject to the code official's approval. If the building or structure or portion thereof is demolished, and does not exist, the condition is considered to be resolved.

304.2 Protective treatment. Exterior surfaces, including but not limited to, doors, door and window frames, cornices, porches, trim, balconies, decks and fences, shall be maintained in good condition. Exterior wood surfaces, other than decay-resistant woods, shall be protected from the elements and decay by painting or other protective covering or treatment. Peeling, flaking and chipped paint shall be eliminated and surfaces repainted. Siding and masonry joints, as well as those between the building envelope and the perimeter of windows, doors and skylights, shall be maintained weather resistant and water tight. Metal surfaces subject to rust or corrosion shall be coated to inhibit such rust and corrosion, and surfaces with rust or corrosion shall be stabilized and coated to inhibit future rust and corrosion. Oxidation stains shall be removed from exterior surfaces. Surfaces designed for stabilization by oxidation are exempt from this requirement.

❖ Other sections of the code require items such as walls, doors, windows and architectural trim to be maintained in good repair and condition. This section makes it clear that if paint or other protective covering or treatment is used to provide protection from the elements, it cannot be peeling, flaking or chipped. Additionally, buildings with deteriorated paint, or with masonry joints and siding in disrepair or not weather tight will eventually decay and exert a blighting influence on the community.

[F] 304.3 Premises identification. Buildings shall have *approved* address numbers placed in a position to be plainly legible and visible from the street or road fronting the property. These numbers shall contrast with their background. Address numbers shall be Arabic numerals or alphabet letters. Numbers shall be not less than 4 inches (102 mm) in height with a minimum stroke width of 0.5 inch (12.7 mm).

❖ Identifying buildings during an emergency (e.g., fire, medical, police) is greatly aided by the proper placement of address identification. In other than emergencies, the address identification serves as a convenience for people attempting to locate a building. The size and contrast criteria are intended to aid visibility from the street. Where multiple structures are remotely located on a site or set back into a property, at locations where multiple addresses are provided (e.g., strip malls) or where the address is not readily visible from the public way, an approved method of identification will also be required. The fire code official has the authority to require that address numbers be located in all locations deemed necessary to properly identify the building by street address. The primary concern is for emergency personnel to locate the building without going through a lengthy search procedure. In the case of a strip mall, identification would be provided for the backs of buildings that face alleys or roads since the emergency response unit may often be directed to the back entrance. The address numbers must be maintained in a readily visible condition to provide for continuous identification. This would include repainting faded numbers or trimming trees or other vegetation that obscures visibility of the address.

304.4 Structural members. Structural members shall be maintained free from *deterioration*, and shall be capable of safely supporting the imposed dead and live loads.

❖ Building components that must support other building components are considered structural. Structural members must be kept sound and capable of supporting all of the dead and live loads imposed upon them. Dead loads are the loads created by the structure itself. The footing must adequately carry the load of the foundation, beams, joists, walls, roof and other similar members located above it.

Live loads are the weights that are added to the finished structure. Live loads include furniture, appliances, equipment and other items added to the inside of the building. Snow, rain, ice and wind are environmental conditions that are also considered live loads in the code.

304.5 Foundation walls. Foundation walls shall be maintained plumb and free from open cracks and breaks and shall be kept in such condition so as to prevent the entry of rodents and other pests.

❖ The foundation must safely support the entire structure. Minor problems left uncorrected can become major. Major foundation problems can result in collapse of the structure.

Minor damage includes hairline cracks, loose and flaking mortar and surface deterioration of cement

INTERNATIONAL CODE COUNCIL®

Copyright © 2018 ICC. ALL RIGHTS RESERVED. Accessed by Jim Davis (JDavis@ShakopeeMN.gov), (City of Shakopee) Order Number #101054067 on Mar 17, 2021 01:42 PM (PDT) pursuant to License Agreement with ICC. No further reproduction, no further reproductions by any third party, or distribution authorized. Single user only, copying and networking prohibited. ANY UNAUTHORIZED REPRODUCTION OR DISTRIBUTION IS A VIOLATION OF THE FEDERAL COPYRIGHT ACT AND THE LICENSE AGREEMENT, AND SUBJECT TO CIVIL AND CRIMINAL PENALTIES THEREUNDER.

101054067

blocks and poured concrete walls. Major damage includes large horizontal and vertical step cracks, and large areas of missing foundation material (see Commentary Figure 304.5).

Three of the most frequent causes of foundation failure result from damage caused at the time of construction, soil problems (settling, sliding, heaving and expanding) and the effects of water. Water entering the foundation through cracks, holes or breaks can freeze and expand, causing damage to the foundation.

The code official should order replacement of structural elements where major damage has occurred and should order appropriate maintenance, such as tuckpointing, if the damage is only minor.

All conditions that permit entry of rodents or other pests must also be corrected.

304.6 Exterior walls. Exterior walls shall be free from holes, breaks, and loose or rotting materials; and maintained weatherproof and properly surface coated where required to prevent *deterioration*.

❖ Holes, cracks, decayed wood or any other condition that permits rain or dampness to enter the structure must be repaired. Exterior surface materials must be properly coated to prevent deterioration if they are not naturally decay resistant. Many materials do not require surface coating, including: certain metals (aluminum, copper, etc.); masonry products (bricks, stone, stucco, etc.); naturally decay-resistant woods (redwood, cedar, etc.); and woods that have been treated with chemicals to prevent decay.

304.7 Roofs and drainage. The roof and flashing shall be sound, tight and not have defects that admit rain. Roof drainage shall be adequate to prevent dampness or *deterioration* in the walls or interior portion of the structure. Roof drains, gutters and downspouts shall be maintained in good repair and free from obstructions. Roof water shall not be discharged in a manner that creates a public nuisance.

❖ A secure, nonleaking roof is necessary to keep a building properly maintained. Even small leaks can cause thousands of dollars in damage to insulation, plaster, studs and joists. Roof leaks usually occur along valley areas and around plumbing vents, chimneys, dormers and other penetrations through the roof.

Water runoff should be diverted away from the structure to prevent damage to the foundation and other structural elements. Runoff must be diverted away from neighboring properties, public sidewalks, alleys and streets to prevent nuisance problems. Two problems that can result from improper water runoff are flooding of basements and standing water or ice buildup on sidewalks, alleys and streets. Drains, gutters and downspouts must be kept in working order so that water runoff is properly diverted.

304.8 Decorative features. Cornices, belt courses, corbels, terra cotta trim, wall facings and similar decorative features

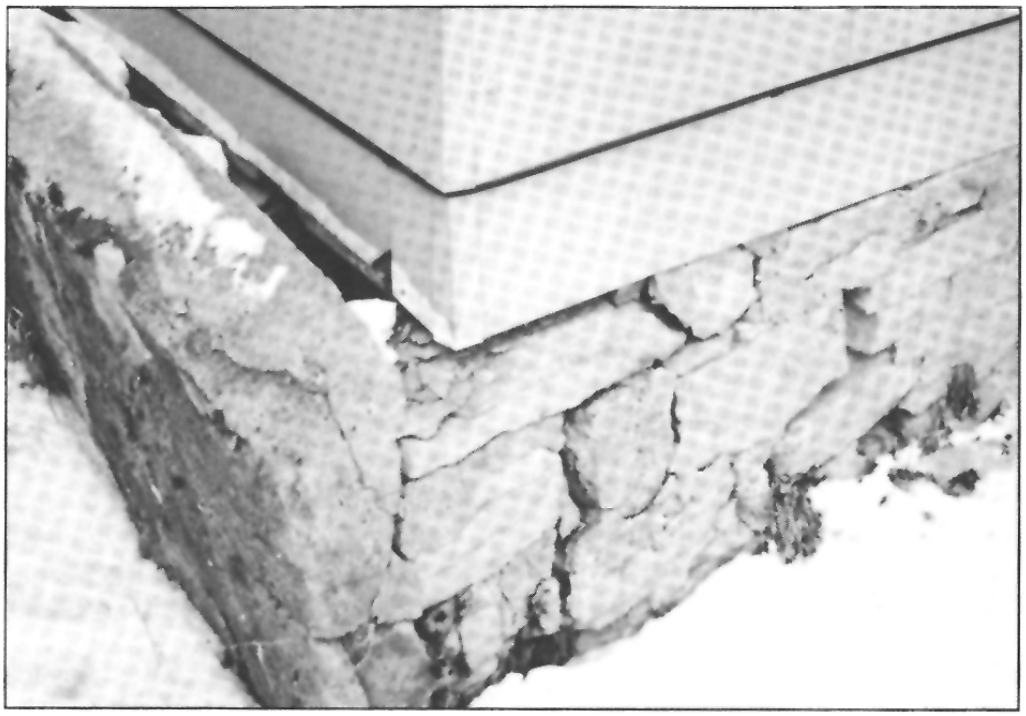

Commentary Figure 304.5
MAJOR DAMAGE TO A FOUNDATION WALL
This foundation is crumbling. Failure to repair it will eventually lead to its collapse.

INTERNATIONAL CODE COUNCIL®
Copyright © 2018 ICC. ALL RIGHTS RESERVED. Accessed by Jim Davis (JDavis@ShakopeeMN.gov), (City of Shakopee) Order Number #101054067 on Mar 17, 2021 01:42 PM (PDT) pursuant to License Agreement with ICC. No further reproduction, no further reproductions by any third party, or distribution authorized. Single user only, copying and networking prohibited. ANY UNAUTHORIZED REPRODUCTION OR DISTRIBUTION IS A VIOLATION OF THE FEDERAL COPYRIGHT ACT AND THE LICENSE AGREEMENT, AND SUBJECT TO CIVIL AND CRIMINAL PENALTIES THEREUNDER.

101054067

shall be maintained in good repair with proper anchorage and in a safe condition.

❖ Exterior decorative features require regular maintenance to prevent their deterioration and to keep them from falling from the building.

304.9 Overhang extensions. Overhang extensions including, but not limited to, canopies, marquees, signs, metal awnings, fire escapes, standpipes and exhaust ducts shall be maintained in good repair and be properly *anchored* so as to be kept in a sound condition. Where required, all exposed surfaces of metal or wood shall be protected from the elements and against decay or rust by periodic application of weather-coating materials, such as paint or similar surface treatment.

❖ Most problems related to overhang extensions, especially signs, marquees, fire escapes and awnings, are a result of deterioration at the points where they are anchored to the building. Anchorage points should be carefully inspected on a regular basis.

Fire escapes, standpipes and exhaust ducts serve the critical functions of providing proper exiting, fire protection and the removal of exhaust products. Regular maintenance is important for their continued compliance with the code.

304.10 Stairways, decks, porches and balconies. Every exterior stairway, deck, porch and balcony, and all appurtenances attached thereto, shall be maintained structurally sound, in good repair, with proper anchorage and capable of supporting the imposed loads.

❖ Regular maintenance is required to keep stairs, decks, porches and balconies in good repair so they do not become a hazard to occupants or visitors. Positive anchorage of elevated decks and exterior stairs that may be subject to collapse is especially important.

Although not mandated, the building code applicable at the time of construction could be consulted for the live loads that these elements are typically required to support.

304.11 Chimneys and towers. Chimneys, cooling towers, smoke stacks, and similar appurtenances shall be maintained structurally safe and sound, and in good repair. Exposed surfaces of metal or wood shall be protected from the elements and against decay or rust by periodic application of weather-coating materials, such as paint or similar surface treatment.

❖ Chimneys, towers of all types and other similar appurtenances are frequently ignored until they become nonfunctional or are in danger of collapse. Because of the corrosiveness of exhaust gases, chimneys and smokestacks often deteriorate on the inside first. The code official should examine chimneys and towers for excessive rust, loose or missing mortar and cracked or disintegrating bricks.

Occasionally, deterioration may prevent the chimney or smokestack from operating properly. Obstructed chimneys have resulted in numerous carbon monoxide deaths. If fuel-burning appliances vent into chimneys or smokestacks, the code official should see that the exhaust gases are being properly conveyed to the chimney, including the connection of the vent to the chimney.

Weather-coating materials may be applied periodically to reduce the effects of the elements on these items.

304.12 Handrails and guards. Every handrail and *guard* shall be firmly fastened and capable of supporting normally imposed loads and shall be maintained in good condition.

❖ This section provides for the safety and maintenance of handrails and guards.

304.13 Window, skylight and door frames. Every window, skylight, door and frame shall be kept in sound condition, good repair and weather tight.

❖ All windows, skylights and doors must be installed in their frames so that they are weather tight (i.e., able to prevent wind, rain or other elements from entering the structure). A workmanlike installation will provide appropriate protection while maintaining operational capability.

304.13.1 Glazing. Glazing materials shall be maintained free from cracks and holes.

❖ All glass is to be maintained without open cracks or holes, which can admit wind and moisture. Defective glass poses hazards to occupants.

304.13.2 Openable windows. Every window, other than a fixed window, shall be easily openable and capable of being held in position by window hardware.

❖ Windows that have broken or are missing hold-open hardware create a dual hazard.

First, windows without hardware are frequently propped open with sticks and other objects. These objects can be dislodged and cause the windows to fall, causing bodily injuries.

Second, in the event of a fire, occupants are at an increased risk if windows cannot be readily secured in an open position. People have died because of inoperable windows, even though they could have easily broken the windows and escaped. It is advisable for the code official to check windows to make sure they open properly and remain open with their own hardware.

304.14 Insect screens. During the period from **[DATE]** to **[DATE]**, every door, window and other outside opening required for *ventilation* of habitable rooms, food preparation areas, food service areas or any areas where products to be included or utilized in food for human consumption are processed, manufactured, packaged or stored shall be supplied with *approved* tightly fitting screens of minimum 16 mesh per inch (16 mesh per 25 mm), and every screen door used for insect control shall have a self-closing device in good working condition.

Exception: Screens shall not be required where other *approved* means, such as air curtains or insect repellent fans, are employed.

❖ Screens reduce insect infestations. Communities are required to establish the number of months screens

INTERNATIONAL CODE COUNCIL®

Copyright © 2018 ICC. ALL RIGHTS RESERVED. Accessed by Jim Davis (JDavis@ShakopeeMN.gov), (City of Shakopee) Order Number #101054067 on Mar 17, 2021 01:42 PM (PDT) pursuant to License Agreement with ICC. No further reproduction, no further reproductions by any third party, or distribution authorized. Single user only, copying and networking prohibited. ANY UNAUTHORIZED REPRODUCTION OR DISTRIBUTION IS A VIOLATION OF THE FEDERAL COPYRIGHT ACT AND THE LICENSE AGREEMENT, AND SUBJECT TO CIVIL AND CRIMINAL PENALTIES THEREUNDER.

101054067

must be used on windows and doors to accommodate the time period that insects are active. Insect populations become dormant or die during the cold season; thus, screens would not be required during cold months.

The requirements for tight-fitting screens (not less than 16 mesh per 25 mm) in any food preparation, storage or service area are extremely important. Improper insect protection in these areas can lead to large-scale contamination of food supplies.

As indicated in the exception, air curtains, insect repellent fans or similar systems may be accepted. The code official must be sure that such a system is operational and employed whenever the doors and windows are open. Although permitted for any opening, these systems are useful for openings that are difficult to screen properly, such as out-swinging doors.

304.15 Doors. Exterior doors, door assemblies, operator systems if provided, and hardware shall be maintained in good condition. Locks at all entrances to dwelling units and sleeping units shall tightly secure the door. Locks on means of egress doors shall be in accordance with Section 702.3.

❖ All exterior doors, door assemblies, operator systems and hardware must properly perform their intended functions (e.g., open and close easily and keep out the elements). Locks must be readily released without keys, special knowledge or effort in accordance with Section 702.3. Security locks that comply with this requirement must function to secure the door as well. Malfunctioning or sticking locks that cannot secure the door may also impede egress because of difficulty in operation or release. The phrase "operator systems if provided" draws attention to automated doors. Maintaining the proper performance of the operator systems, where present, further assures proper egress will be maintained.

304.16 Basement hatchways. Every *basement* hatchway shall be maintained to prevent the entrance of rodents, rain and surface drainage water.

❖ Basement hatchways must prevent rain, water and rodents from entering the structure. When maintenance is ignored, wood members (including doors) decay, metal doors and latches rust and hinges break.

Drainage must be provided to prevent water from accumulating around hatchways and leaking inside the structure.

304.17 Guards for basement windows. Every *basement* window that is openable shall be supplied with rodent shields, storm windows or other *approved* protection against the entry of rodents.

❖ Basement windows are especially susceptible to the entry of the Norway rat, one of several rodents that frequently nest in the ground near structures. Ratproof shields, screens, storm windows or other protective materials must be installed on windows capable of being opened to eliminate their use as an entry point.

304.18 Building security. Doors, windows or hatchways for *dwelling units*, room units or *housekeeping units* shall be provided with devices designed to provide security for the *occupant*s and property within.

❖ This section establishes criteria for providing security for occupants of dwelling units, rooming units and housekeeping units that are rented, leased or let.

304.18.1 Doors. Doors providing access to a *dwelling unit*, *rooming unit* or *housekeeping unit* that is rented, leased or let shall be equipped with a deadbolt lock designed to be readily openable from the side from which egress is to be made without the need for keys, special knowledge or effort and shall have a minimum lock throw of 1 inch (25 mm). Such deadbolt locks shall be installed according to the manufacturer's specifications and maintained in good working order. For the purpose of this section, a sliding bolt shall not be considered an acceptable deadbolt lock.

❖ Everyone has a right to feel safe in their own dwelling; therefore, the installation of locking hardware to secure entry doorways is essential. Where installed for security purposes, however, locks and latches can intentionally prohibit the use of an egress door and thus interfere with or prevent the egress of occupants at the time of an emergency, such as a fire. The ability of occupants to easily egress a building in case of a fire or emergency situation is a primary concern to help prevent the loss of human life. Examples of special knowledge would be a combination lock or an unlocking device in an unknown, unexpected or hidden location. Special effort would require unusual and unexpected physical ability to unlock or make the door fully available for egress.

304.18.2 Windows. Operable windows located in whole or in part within 6 feet (1828 mm) above ground level or a walking surface below that provide access to a *dwelling unit*, *rooming unit* or *housekeeping unit* that is rented, leased or let shall be equipped with a window sash locking device.

❖ In order to coordinate the provisions of the code with the United States Department of Housing and Urban Development (HUD) housing quality standard requirements for rental properties, a height requirement of 6 feet (1827 mm) above the ground was established for windows. This could be considered a security concern, thus dictating the need for window locks.

304.18.3 Basement hatchways. *Basement* hatchways that provide access to a *dwelling unit*, *rooming unit* or *housekeeping unit* that is rented, leased or let shall be equipped with devices that secure the units from unauthorized entry.

❖ Windows to basements are problematic from a security point of view and, therefore, need to be equipped with locking devices to provide security for the units.

304.19 Gates. Exterior gates, gate assemblies, operator systems if provided, and hardware shall be maintained in good

INTERNATIONAL CODE COUNCIL®
Copyright © 2018 ICC. ALL RIGHTS RESERVED. Accessed by Jim Davis (JDavis@ShakopeeMN.gov), (City of Shakopee) Order Number #101054067 on Mar 17, 2021 01:42 PM (PDT) pursuant to License Agreement with ICC. No further reproduction, no further reproductions by any third party, or distribution authorized. Single user only, copying and networking prohibited. ANY UNAUTHORIZED REPRODUCTION OR DISTRIBUTION IS A VIOLATION OF THE FEDERAL COPYRIGHT ACT AND THE LICENSE AGREEMENT, AND SUBJECT TO CIVIL AND CRIMINAL PENALTIES THEREUNDER.

101054067

condition. Latches at all entrances shall tightly secure the gates.

❖ Similar to Section 304.15 addressing doors, all gate assemblies, operator systems and hardware must be maintained to perform their intended functions (i.e., open and close as intended). Malfunctioning or sticking latches that cannot secure the gate may also impede egress because of difficulty in operation or release. The phrase "operator systems if provided" draws attention to automated doors. Maintaining the proper performance of the operator systems, where present, further assures proper egress will be maintained.

SECTION 305
INTERIOR STRUCTURE

305.1 General. The interior of a structure and equipment therein shall be maintained in good repair, structurally sound and in a sanitary condition. *Occupants* shall keep that part of the structure that they occupy or control in a clean and sanitary condition. Every *owner* of a structure containing a *rooming house*, *housekeeping units*, a hotel, a dormitory, two or more *dwelling unit*s or two or more nonresidential occupancies, shall maintain, in a clean and sanitary condition, the shared or public areas of the structure and *exterior property*.

❖ The interior of a structure and its equipment must be maintained so as not to adversely affect the occupants' health and safety. A structure must protect occupants from the exterior environment.

305.1.1 Unsafe conditions. The following conditions shall be determined as unsafe and shall be repaired or replaced to comply with the *International Building Code* or the *International Existing Building Code* as required for existing buildings:

1. The nominal strength of any structural member is exceeded by nominal loads, the load effects or the required strength.
2. The anchorage of the floor or roof to walls or columns, and of walls and columns to foundations is not capable of resisting all nominal loads or load effects.
3. Structures or components thereof that have reached their limit state.
4. Structural members are incapable of supporting nominal loads and load effects.
5. Stairs, landings, balconies and all similar walking surfaces, including *guards* and handrails, are not structurally sound, not properly *anchored* or are *anchored* with connections not capable of supporting all nominal loads and resisting all load effects.
6. Foundation systems that are not firmly supported by footings are not plumb and free from open cracks and breaks, are not properly *anchored* or are not capable of supporting all nominal loads and resisting all load effects.

Exceptions:

1. Where substantiated otherwise by an *approved* method.
2. Demolition of unsafe conditions shall be permitted where *approved* by the *code official.*

❖ Section 305.1.1 describes unsafe conditions related to the interior of the structure, and thus details situations that can prompt the code official to require replacement or repair.

Item 1 indicates that if the strength of the structural member is exceeded by either the nominal loads or load effects, the condition is to be regarded as unsafe. Nominal loads and load effects, as defined by the IBC and Items 2–6 of this section, are when a structure or component is regarded as incapable of performing its intended function and thus becomes unsafe.

Item 2 deals with required strength of connections between structural members. More specifically, each connection must be able to resist nominal loads and load effects; otherwise, the building or affected portion thereof is to be regarded as unsafe. Anchorage of various elements of a structure is essential to its stability. When anchorage is not capable of transferring the intended loads, the structure or component is said to be unsafe.

Item 3 specifies that any condition beyond which a structure or member becomes unfit for service and is no longer useful for its intended function is considered to be unsafe. This includes its serviceability limit and strength limit state. "Limit state," as defined by the IBC, is a condition beyond which a structure or member becomes unfit for service and is no longer useful for its intended function (serviceability limit state) or to be unsafe (strength limit state). Any structure reaching this state is said to be unsafe.

Items 4 through 6: The interior of a building may contain other structural elements as well. These items, which include stairs, walking surfaces, handrails and guards, are specifically denoted as essential structural elements that must be preserved to allow for safe means of egress and protection.

Item 4 addresses structural members that have become unable to support the intended loads.

Item 5 addresses interior stairs, decks, porches, balconies and all similar elements that are portions of a means of egress system and as such represent a significant safety concern if left in an unsafe condition. Should any of these elements of a means of egress system become structurally unsound, the building or portions thereof may be regarded as unsafe.

INTERNATIONAL CODE COUNCIL®
Copyright © 2018 ICC. ALL RIGHTS RESERVED. Accessed by Jim Davis (JDavis@ShakopeeMN.gov), (City of Shakopee) Order Number #101054067 on Mar 17, 2021 01:42 PM (PDT) pursuant to License Agreement with ICC. No further reproduction, no further reproductions by any third party, or distribution authorized. Single user only, copying and networking prohibited. ANY UNAUTHORIZED REPRODUCTION OR DISTRIBUTION IS A VIOLATION OF THE FEDERAL COPYRIGHT ACT AND THE LICENSE AGREEMENT, AND SUBJECT TO CIVIL AND CRIMINAL PENALTIES THEREUNDER.

101054067

Item 6 addresses foundation systems. Foundation systems are essential to the structural integrity of any building. If any portion of any foundation system is not supported by adequate soil, is not plumb as intended to distribute the loads, has cracks or breaks or is inadequately anchored, the building may be regarded as unsafe.

Exception 1 is to recognize that a qualified entity could substantiate an alternative method or material that meets the purpose and intent of the code. This alternative would need to be approved by the code official. An engineering study that substantiates the structural integrity in a rational analysis may be the basis for accepting a contention that the building is not unsafe.

Exception 2 allows a building owner the option of demolition of an unsafe condition subject to the code official's approval. If the building or structure or portion thereof is demolished, and does not exist, the condition is considered to be resolved.

305.2 Structural members. Structural members shall be maintained structurally sound, and be capable of supporting the imposed loads.

❖ Improper original construction, unapproved additions and repairs, water damage, deferred maintenance and overloading of structural members will result in structural damage and failure.

Common construction and repair defects include: undersized structural members that, over time, sag, crack and even collapse; inadequately fastened structural members that loosen and separate from each other; poor-quality construction materials; improperly installed or oversized notches and holes in structural members; and poorly installed structural members.

Water is one of the most destructive elements to structures. Water damage most frequently occurs from roof leaks, plumbing leaks in bathrooms and kitchens, and water penetration into basements and crawl spaces. Unrepaired leaks can rot and decay structural members. Areas of concern include the bottom of columns, the outside ends of beams and joists, flooring under bathrooms and kitchens and the underside of roofs. Check all of these for evidence of water penetration and damage.

Deferred maintenance is a problem with all buildings. A structure begins to deteriorate the moment it is completed. Both outside and inside factors affect structures—water, sun and wind on the outside, and furniture, equipment and occupants on the inside. As equipment wears out or malfunctions, it needs to be repaired or replaced.

Structural members must be able to bear the loads imposed upon them. Commercial and industrial buildings present special concerns for the code official. To provide some level of confidence that a structure will safely withstand the anticipated loads, the code official may want to require the owner to provide evidence of the load-bearing capacity of the structure, as determined by a registered architect or engineer.

This information may be useful every time a structure changes occupancy. The code official cannot be sure structural changes have not occurred since the previous calculations were prepared.

305.3 Interior surfaces. Interior surfaces, including windows and doors, shall be maintained in good, clean and sanitary condition. Peeling, chipping, flaking or abraded paint shall be repaired, removed or covered. Cracked or loose plaster, decayed wood and other defective surface conditions shall be corrected.

❖ Interior surface damage is frequently the result of tenant abuse or water damage. Water damage results from leaking roofs, plumbing fixtures and water pipes, and also damaged or open windows and doors that permit rain to enter. Any damaged interior surfaces are required to be repaired and the cause of the damage must be corrected.

Interior surfaces that contain lead-based paint may present serious health hazards to occupants, especially children. Lead is a toxic heavy metal that enters the body by inhalation or ingestion of fine particulate. Lead affects many organs as well as the central nervous system, and is particularly toxic to young children because it retards brain and central nervous system development.

HUD estimates that three-quarters of the dwellings built before 1980 contain some lead-based paint. Because the amount of lead in paint was gradually reduced during the 30 years prior to its prohibition in general application in 1978 (lead-based paint is currently produced for specialized industrial applications), dwellings built before 1950 are more likely to contain lead-based paint and paint with higher concentrations of lead. HUD surveys show that 90 percent of dwellings built before 1940, 80 percent of dwellings built between 1940 and 1959 and 62 percent of dwellings built between 1960 and 1979 contain lead-based paint. Lead-based paint is often found under newer layers of paint that is not lead based.

Intact lead-based paint is not an immediate hazard because the predominant route of lead poisoning is through ingestion or inhalation of fine lead particulate found in contaminated dust. The risk of poisoning becomes significant when lead-based paint contaminates dust through peeling, chipping, flaking and abraded conditions identified in the code. Lead contamination may also be caused by lead-based paint that is disturbed during repair and remodeling activities such as scraping, sanding, drilling and cutting.

Lead hazard control is achieved by removing lead-contaminated dust and eliminating the source of contamination. The determination of the type of activities (abatement, interim controls or repair) needed to correct hazardous conditions depends on the extent of paint deterioration and the occupancy. More protec-

INTERNATIONAL CODE COUNCIL®
Copyright © 2018 ICC. ALL RIGHTS RESERVED. Accessed by Jim Davis (JDavis@ShakopeeMN.gov), (City of Shakopee) Order Number #101054067 on Mar 17, 2021 01:42 PM (PDT) pursuant to License Agreement with ICC. No further reproduction, no further reproductions by any third party, or distribution authorized. Single user only, copying and networking prohibited. ANY UNAUTHORIZED REPRODUCTION OR DISTRIBUTION IS A VIOLATION OF THE FEDERAL COPYRIGHT ACT AND THE LICENSE AGREEMENT, AND SUBJECT TO CIVIL AND CRIMINAL PENALTIES THEREUNDER.

101054067

tive measures should be taken if children under 6 years of age are likely to occupy the building because they are more sensitive to lead contamination. All activities that disturb lead-based paint can generate significant lead hazards. Precautions should be initiated to protect workers, occupants and the environment. Precautions include selecting procedures that minimize the creation of dust [such as wet sanding, wet scraping, power tools with high-efficiency particulate air (HEPA) filtered vacuum attachments and heat guns less than 1,100°F (593°C)]; containment of dust and debris; covering and securing horizontal surfaces, occupants' furniture and fixtures (if exterior work, the ground and plants) with polyethylene to prevent contamination; thorough cleaning with a HEPA-filtered vacuum and detergent; and clearance testing to prove lead concentrations are below hazardous levels before occupancy.

Federal regulations recognize two levels of lead-specific hazard control measures—abatement and interim controls. Abatement is defined as measures designed to last more than 20 years, while less durable measures are considered interim controls. Environmental Protection Agency (EPA) regulations or state regulations approved by the EPA require workers and supervisors to be trained and certified to undertake activities specifically intended to abate or control lead-based paint hazards. The same activities that are undertaken as specific lead abatement or interim controls (demolition, paint removal, door or window replacement, etc.) may be undertaken by noncertified workers and supervisors if they are a part of general repair and remodeling activities.

More detailed information on lead hazard evaluation and control is available from state and local agencies, the National Lead Information Center (800-424-5323) sponsored by the EPA and the HUD Office of Lead Hazard Control. The code official can help protect public health and safety by coordinating code enforcement with enforcement of lead regulations and providing lead hazard awareness and hazard control information to contractors and property owners.

305.4 Stairs and walking surfaces. Every stair, ramp, landing, balcony, porch, deck or other walking surface shall be maintained in sound condition and good repair.

❖ Handrails, treads and risers must be structurally sound, firmly attached to the structure and properly maintained to safely perform their intended functions. All parts of a stair also should be inspected, including stringers, risers, treads, balusters, guards and handrails, and also all walking surfaces such as floors, landings, decks or ramps.

305.5 Handrails and guards. Every handrail and *guard* shall be firmly fastened and capable of supporting normally imposed loads and shall be maintained in good condition.

❖ This section provides for the safety and maintenance of handrails and guards. Although not mandated, loads for handrails and guards in the applicable building code can be considered the normally imposed loads.

305.6 Interior doors. Every interior door shall fit reasonably well within its frame and shall be capable of being opened and closed by being properly and securely attached to jambs, headers or tracks as intended by the manufacturer of the attachment hardware.

❖ The ability of a door to function as the manufacturer intended is one of the key elements in being able to properly exit a building. In addition to contributing to building egress, doors are also key elements in providing for security and privacy; therefore, all interior doors should be kept in a state of repair that will allow them to function effectively.

SECTION 306
COMPONENT SERVICEABILITY

306.1 General. The components of a structure and equipment therein shall be maintained in good repair, structurally sound and in a sanitary condition.

❖ Section 306.1 contains a general provision for components and equipment related to a structure to be maintained in sound and sanitary condition, which is the spirit and intent of this code.

306.1.1 Unsafe conditions. Where any of the following conditions cause the component or system to be beyond its limit state, the component or system shall be determined as unsafe and shall be repaired or replaced to comply with the *International Building Code* or the *International Existing Building Code* as required for existing buildings:

1. Soils that have been subjected to any of the following conditions:
   - 1.1. Collapse of footing or foundation system.
   - 1.2. Damage to footing, foundation, concrete or other structural element due to soil expansion.
   - 1.3. Adverse effects to the design strength of footing, foundation, concrete or other structural element due to a chemical reaction from the soil.
   - 1.4. Inadequate soil as determined by a geotechnical investigation.
   - 1.5. Where the allowable bearing capacity of the soil is in doubt.
   - 1.6. Adverse effects to the footing, foundation, concrete or other structural element due to the ground water table.
2. Concrete that has been subjected to any of the following conditions:
   - 2.1. *Deterioration*.
   - 2.2. *Ultimate deformation*.
   - 2.3. Fractures.
   - 2.4. Fissures.
   - 2.5. Spalling.

INTERNATIONAL CODE COUNCIL®
Copyright © 2018 ICC. ALL RIGHTS RESERVED. Accessed by Jim Davis (JDavis@ShakopeeMN.gov), (City of Shakopee) Order Number #101054067 on Mar 17, 2021 01:42 PM (PDT) pursuant to License Agreement with ICC. No further reproduction, no further reproductions by any third party, or distribution authorized. Single user only, copying and networking prohibited. ANY UNAUTHORIZED REPRODUCTION OR DISTRIBUTION IS A VIOLATION OF THE FEDERAL COPYRIGHT ACT AND THE LICENSE AGREEMENT, AND SUBJECT TO CIVIL AND CRIMINAL PENALTIES THEREUNDER.

101054067

2.6. Exposed reinforcement.

2.7. *Detached*, dislodged or failing connections.

3. Aluminum that has been subjected to any of the following conditions:

3.1. *Deterioration*.

3.2. Corrosion.

3.3. Elastic deformation.

3.4. *Ultimate deformation*.

3.5. Stress or strain cracks.

3.6. Joint fatigue.

3.7. *Detached*, dislodged or failing connections.

4. Masonry that has been subjected to any of the following conditions:

4.1. *Deterioration.*

4.2. *Ultimate deformation.*

4.3. Fractures in masonry or mortar joints.

4.4. Fissures in masonry or mortar joints.

4.5. Spalling.

4.6. Exposed reinforcement.

4.7. *Detached,* dislodged or failing connections.

5. Steel that has been subjected to any of the following conditions:

5.1. *Deterioration.*

5.2. Elastic deformation.

5.3. *Ultimate deformation.*

5.4. Metal fatigue.

5.5. *Detached,* dislodged or failing connections.

6. Wood that has been subjected to any of the following conditions:

6.1. Ultimate deformation.

6.2. Deterioration.

6.3. Damage from insects, rodents and other vermin.

6.4. Fire damage beyond charring.

6.5. Significant splits and checks.

6.6. Horizontal shear cracks.

6.7. Vertical shear cracks.

6.8. Inadequate support.

6.9. Detached, dislodged or failing connections.

6.10. Excessive cutting and notching.

Exceptions:

1. Where substantiated otherwise by an *approved* method.
2. Demolition of unsafe conditions shall be permitted where *approved* by the *code official.*

❖ This provision specifies that each material (such as soil, concrete, masonry, wood, steel, etc.) used to create a building or structure must continue to be viable.

Item 1 delineates some conditions of soil or foundation stability that denote unsafe conditions. Any of these allow the code official to determine that an unsafe condition exists.

Items 2 through 6 delineate some conditions that, if present in structural elements, are sufficient to determine that an unsafe condition exists.

SECTION 307
HANDRAILS AND GUARDRAILS

307.1 General. Every exterior and interior flight of stairs having more than four risers shall have a handrail on one side of the stair and every open portion of a stair, landing, balcony, porch, deck, ramp or other walking surface that is more than 30 inches (762 mm) above the floor or grade below shall have *guards.* Handrails shall be not less than 30 inches (762 mm) in height or more than 42 inches (1067 mm) in height measured vertically above the nosing of the tread or above the finished floor of the landing or walking surfaces. *Guards* shall be not less than 30 inches (762 mm) in height above the floor of the landing, balcony, porch, deck, or ramp or other walking surface.

Exception: *Guards* shall not be required where exempted by the adopted building code.

❖ Note that this section does not discuss maintenance requirements for handrails and guards. It contains requirements for handrail and guard installations at specific locations in all existing buildings. If these locations are present at an existing building, then the minimum handrail and guard requirements are mandated. Handrails are required on at least one side of all means of egress stairs more than four risers in height. Handrails can neither be less than 30 inches (762 mm) nor more than 42 inches (1067 mm) above the nosing of the tread (see Commentary Figure 307.1).

Guards are required on the open side of all uneven walking surfaces greater than 30 inches (762 mm) in height that include stairs, landings, balconies, porches, decks or ramps. The guard must be at least 30 inches (762 mm) above the floor in all cases. Guards are to contain intermediate rails, balusters or other construction to reduce the chance of an adult or child from falling through the guard. If the guard is missing some intermediate rails or balustrades, it is recommended that it be repaired to its original condition if it will provide protection equivalent to that when originally constructed.

The exception refers to the building code currently adopted by the jurisdiction. If the current adopted building code would not require a guard for a particular location in a new building, then a guard would not be required in accordance with this exception.

INTERNATIONAL CODE COUNCIL®
Copyright © 2018 ICC. ALL RIGHTS RESERVED. Accessed by Jim Davis (JDavis@ShakopeeMN.gov), (City of Shakopee) Order Number #101054067 on Mar 17, 2021 01:42 PM (PDT) pursuant to License Agreement with ICC. No further reproduction, no further reproductions by any third party, or distribution authorized. Single user only, copying and networking prohibited. ANY UNAUTHORIZED REPRODUCTION OR DISTRIBUTION IS A VIOLATION OF THE FEDERAL COPYRIGHT ACT AND THE LICENSE AGREEMENT, AND SUBJECT TO CIVIL AND CRIMINAL PENALTIES THEREUNDER.

101054067

SECTION 308
RUBBISH AND GARBAGE

308.1 Accumulation of rubbish or garbage. *Exterior property* and *premises,* and the interior of every structure, shall be free from any accumulation of *rubbish* or garbage.

❖ Unsanitary houses are found in almost every community. The code official may frequently find conditions where occupants fail to properly store and remove their garbage and refuse. Occasionally, the conditions may be so bad that he or she must condemn the structure as unfit for human occupancy in accordance with Section 108.1.3. Emotional, physical and mental problems may be contributing factors. The code official may have to work with health officials, social workers, child protection workers and a host of other social service agencies to obtain a solution to the problem.

Improperly stored garbage and rubbish in public halls and stairways may result in insect and rodent infestations, trip hazards and accidental fires. More importantly, improper storage creates a hazard when the exit must be used in an emergency, such as a fire.

308.2 Disposal of rubbish. Every *occupant* of a structure shall dispose of all *rubbish* in a clean and sanitary manner by placing such *rubbish* in *approved* containers.

❖ Rubbish includes all waste materials except garbage. Occupants are responsible for disposing of their own rubbish in proper containers. Three frequent causes for improper rubbish disposal are:

- The occupants are careless—rubbish is stacked and stored in a haphazard fashion.
- Insufficient containers are provided to handle rubbish.
- The rubbish is not being picked up frequently enough to eliminate the volume being created.

The code official should work with occupants and owners to determine the cause of the problem and then order the owners or occupants to take the appropriate action to resolve it.

308.2.1 Rubbish storage facilities. The *owner* of every occupied *premises* shall supply *approved* covered containers for *rubbish,* and the *owner* of the *premises* shall be responsible for the removal of *rubbish.*

❖ The owner is responsible for the removal of all rubbish. This provision is helpful as an enforcement tool. It eliminates confusion as to whether the tenant, the operator or the owner is responsible.

308.2.2 Refrigerators. Refrigerators and similar equipment not in operation shall not be discarded, abandoned or stored on *premises* without first removing the doors.

❖ Discarded refrigerators pose an attractive nuisance to children. Children often climb into the refrigerator and close the door afterward to create a hiding place. Due to the risk of suffocation from being trapped in the refrigerator, the doors must be removed before it is considered safe to keep it during periods of storage or to properly dispose of the unit.

308.3 Disposal of garbage. Every *occupant* of a structure shall dispose of garbage in a clean and sanitary manner by placing such garbage in an *approved* garbage disposal facility or *approved* garbage containers.

❖ Garbage is the animal and vegetable waste created from the preparation and consumption of food. Occu-

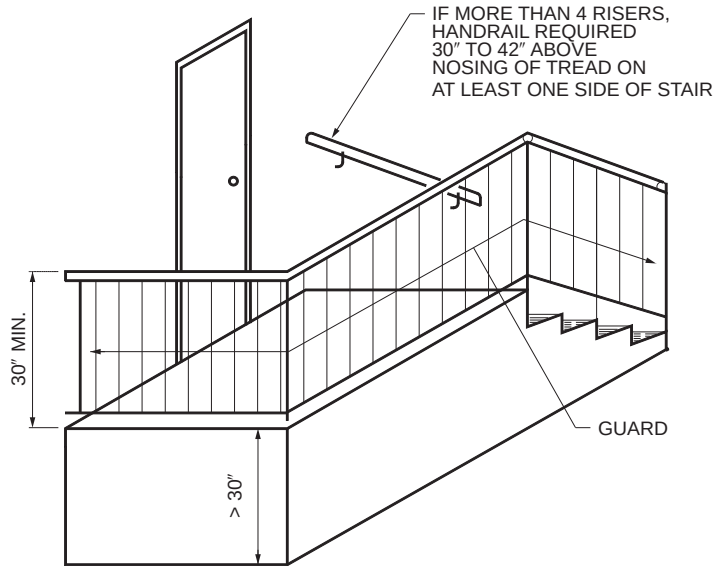

For SI: 1 inch = 25.4 mm.

Commentary Figure 307.1
HANDRAILS AND GUARDS

INTERNATIONAL CODE COUNCIL®
Copyright © 2018 ICC. ALL RIGHTS RESERVED. Accessed by Jim Davis (JDavis@ShakopeeMN.gov), (City of Shakopee) Order Number #101054067 on Mar 17, 2021 01:42 PM (PDT) pursuant to License Agreement with ICC. No further reproduction, no further reproductions by any third party, or distribution authorized. Single user only, copying and networking prohibited. ANY UNAUTHORIZED REPRODUCTION OR DISTRIBUTION IS A VIOLATION OF THE FEDERAL COPYRIGHT ACT AND THE LICENSE AGREEMENT, AND SUBJECT TO CIVIL AND CRIMINAL PENALTIES THEREUNDER.

101054067

pants are responsible for properly disposing of their garbage by either using a garbage disposal (if available) or by placing the waste in approved garbage storage containers.

Improper disposal of garbage can attract rodents, insects, animals and vermin, produce noxious odors and create potential health problems. Similar to rubbish disposal, garbage disposal problems can be the result of:

- Careless disposal (not properly wrapped or stored) by the occupants.
- Insufficient containers to handle the regular amount of garbage.
- Garbage not being picked up frequently enough.
- The mechanical garbage disposal not operating.

The health consequences to the occupants and the neighborhood are probably more severe with garbage than rubbish; therefore, the code official must promptly order the correction of this problem and require an ongoing program of garbage disposal.

308.3.1 Garbage facilities. The *owner* of every dwelling shall supply one of the following: an *approved* mechanical food waste grinder in each *dwelling unit;* an *approved* incinerator unit in the structure available to the *occupants* in each *dwelling unit;* or an *approved* leakproof, covered, outside garbage container.

❖ The owner of any dwelling must provide a mechanical garbage disposal, an approved incinerator or enough containers to hold all garbage produced.

The storage of garbage in plastic bags is not allowed. Animals, rodents and vermin can easily open such bags and spread the garbage stored in them. Garbage containers are to be placed outside of the dwelling unit and be constructed of material that is resistant to animals and rodents. The garbage containers are to be covered with lids.

308.3.2 Containers. The *operator* of every establishment producing garbage shall provide, and at all times cause to be utilized, *approved* leakproof containers provided with close-fitting covers for the storage of such materials until removed from the *premises* for disposal.

❖ The operators of restaurants and similar establishments that produce garbage are required to provide sufficient numbers of containers to store the garbage properly until such time that it is removed from the premises.

Improper storage of animal and vegetable wastes produces noxious odors and permits rodents and other vermin access to the garbage. It also creates potential health problems.

SECTION 309
PEST ELIMINATION

309.1 Infestation. Structures shall be kept free from insect and rodent *infestation.* Structures in which insects or rodents are found shall be promptly exterminated by *approved* processes that will not be injurious to human health. After pest elimination, proper precautions shall be taken to prevent reinfestation.

❖ There are two basic types of insect infestations: nuisance and wood destroying. Nuisance insects include flies, fleas, bees, cockroaches and silverfish. Wood-destroying insects include termites, powder-post beetles and carpenter ants.

Nuisance insects are usually found near food sources and in damp areas.

Wood-destroying insects are sometimes difficult to find. The code official or a professional exterminator may probe wood members for evidence of infestation. Concrete in contact with the soil should be visually checked for evidence of termite tubes leading from the soil to wood members. Wood infested with powder-post beetles frequently has the appearance of having been penetrated by shotgun pellets. A large powder-post beetle infestation leaves many small holes in the wood. Additionally, active beetles leave a fine wood powder called “frass” on the wood.

Eliminating nuisance insects may require treating the building with insect spray on a regular basis. Eliminating wood-destroying insects may require poisoning the soil around the building. Severe insect infestations may necessitate replacement of structural members.

Evidence of a rodent infestation can include droppings, gnaw marks and oily rub stains (imprints left where the rodent’s body rubbed against the structure). Such infestations should be ordered exterminated. Additionally, corrective measures must be taken to reduce the possibility of a reinfestation.

309.2 Owner. The *owner* of any structure shall be responsible for pest elimination within the structure prior to renting or leasing the structure.

❖ The owner must eliminate all rodents and insects before a building or portion of a building can be rented or leased. Although it would appear easy to enforce this provision, the reality is that a new occupant may not notice any insect or rodent problems until after the building has been occupied. It may be difficult and even impossible to determine if an infestation existed before the new occupants moved in. One practical way to resolve this problem is to require the owner to have the building inspected for infestations before occupancy.

309.3 Single occupant. The *occupant* of a one-family dwelling or of a single-*tenant* nonresidential structure shall be responsible for pest elimination on the *premises.*

❖ In a single-family dwelling or a single-tenant nonresidential unit, the occupant of the unit—not the owner—is responsible for maintaining the property free of infestation. Accordingly, the code official should cite the occupant for rodent or insect infestations.

309.4 Multiple occupancy. The *owner* of a structure containing two or more *dwelling unit*s, a multiple *occupancy,* a

INTERNATIONAL CODE COUNCIL®
Copyright © 2018 ICC. ALL RIGHTS RESERVED. Accessed by Jim Davis (JDavis@ShakopeeMN.gov), (City of Shakopee) Order Number #101054067 on Mar 17, 2021 01:42 PM (PDT) pursuant to License Agreement with ICC. No further reproduction, no further reproductions by any third party, or distribution authorized. Single user only, copying and networking prohibited. ANY UNAUTHORIZED REPRODUCTION OR DISTRIBUTION IS A VIOLATION OF THE FEDERAL COPYRIGHT ACT AND THE LICENSE AGREEMENT, AND SUBJECT TO CIVIL AND CRIMINAL PENALTIES THEREUNDER.

101054067

rooming house or a nonresidential structure shall be responsible for pest elimination in the public or shared areas of the structure and *exterior property*. If *infestation* is caused by failure of an *occupant* to prevent such *infestation* in the area occupied, the *occupant* and *owner* shall be responsible for pest elimination.

❖ The owners of public or shared areas in multiple-unit residential and nonresidential buildings must eliminate rodents and insects from the public or shared areas of the structure and exterior property. If a single unit in one of these buildings is infested, it is the owner and occupant's responsibility to provide for the extermination.

309.5 Occupant. The *occupant* of any structure shall be responsible for the continued rodent and pest-free condition of the structure.

Exception: Where the *infestations* are caused by defects in the structure, the *owner* shall be responsible for pest elimination.

❖ Occupants must maintain their units in a clean and sanitary manner, free of rodents. If the occupants fail to maintain their unit, then they are responsible for all pest elimination costs.

From a practical point of view, this section is difficult to enforce. Occupants who are going to be charged pest elimination fees may move out before paying such a fee. Unfortunately, once the unit is vacant the owner becomes responsible for the pest elimination. Because the owner is responsible for correcting any defects in the structure (see Section 301.2), he or she is then responsible for any infestation caused by these defects.

Bibliography

The following resource materials were used in the preparation of the commentary for this chapter of the code:

IBC—2018, *International Building Code*. Washington, DC: International Code Council, 2017.

IRC—2018, *International Residential Code*. Washington, DC: International Code Council, 2017.

INTERNATIONAL CODE COUNCIL®

Copyright © 2018 ICC. ALL RIGHTS RESERVED. Accessed by Jim Davis (JDavis@ShakopeeMN.gov), (City of Shakopee) Order Number #101054067 on Mar 17, 2021 01:42 PM (PDT) pursuant to License Agreement with ICC. No further reproduction, no further reproductions by any third party, or distribution authorized. Single user only, copying and networking prohibited. ANY UNAUTHORIZED REPRODUCTION OR DISTRIBUTION IS A VIOLATION OF THE FEDERAL COPYRIGHT ACT AND THE LICENSE AGREEMENT, AND SUBJECT TO CIVIL AND CRIMINAL PENALTIES THEREUNDER.

101054067

Chapter 4: Light, Ventilation and Occupancy Limitations

General Comments

Chapter 4 establishes the minimum criteria for light and ventilation and identifies occupancy limitations.

Section 401 outlines the scope of Chapter 4 (i.e., minimum light, ventilation and space requirements). This section also establishes who is responsible for complying with the provisions of the chapter, permits alternative arrangements of windows and other devices to comply with the requirements for light and ventilation and prohibits certain room arrangements and occupancy uses.

Requirements for light, ventilation and space have not always been incorporated in construction and occupancy codes. In the United States, one of the first attempts to establish criteria for light and ventilation occurred with the passage of the 1867 Tenement Housing Act in New York City. A principal feature of the act required sleeping rooms to communicate directly with external air, or to have a ventilating window or transom connected to a neighboring room or hall.

In 1879, New York City passed a second Tenement Housing Act, which expanded the light and ventilation requirements of the 1867 law by mandating that windows have an opening of at least 12 square feet (1.1 m^2) in every room. Finally, New York City passed the Tenement Housing Act of 1901, which required owners to provide additional lighting and ventilation to all tenements. Many other provisions also contributed to the health, safety and welfare of the occupants.

Light, ventilation and space requirements relate to basic human needs. In its Basic Principles of Healthful Housing, the Committee on the Hygiene of Housing of the American Public Health Association (APHA) established several principles regarding the relationship of housing to health. These basic principles include several that relate specifically to the need for adequate light, ventilation and space, including physiological needs, psychological needs and protection against disease and accidents:

Fundamental physiological needs:

- An atmosphere of reasonable chemical purity (proper ventilation removes chemicals from the home and work environment).
- Adequate daylight illumination and avoidance of undue daylight glare.
- Direct sunlight (the sun's rays assist in killing germs).
- Adequate artificial illumination and avoidance of glare.
- Adequate space for exercise and for the play of children.

Fundamental psychological needs:

- Adequate privacy for the individual.
- Facilities that make possible the performance of household tasks without undue physical and mental fatigue (adequate space and sufficient ceiling heights reduce physical and mental fatigue).
- Protection against contagion.
- Sufficient space in sleeping rooms to minimize the danger of contact infection.

Protection against accidents:

- Adequate facilities for escape in case of fire.

Protection against overcrowding:

- Population controls can maintain neighborhood density, which can avoid overtaxing public facilities such as parks and schools, and avoid accelerated wear of dwellings.

Habitable rooms require adequate light to assist occupants in providing for proper cleanliness and sanitation, and to reduce trip hazards. Well-lighted rooms have a positive impact on mental health, while dark, dingy rooms can have the opposite effect.

Ventilation is defined as "the natural or mechanical process of supplying conditioned or unconditioned air to, or removing such air from, any space." Ventilating air into a space serves three functions:

- Combustion and makeup air for fuel-burning appliances is provided.
- Air being exhausted from the building through mechanical or natural means is replaced.
- Air movement within the structure is enhanced.

Ventilation air exhausting from a structure also serves three functions:

- Excess moisture is eliminated.
- Unpleasant odors, toxic fumes, dirt, dust and other particulate matter are removed.
- Air movement within the structure is enhanced.

Oversized or improperly installed mechanical ventilation can cause fuel-burning appliances to backdraft into the structure and may cause toxic materials to be exhausted into inappropriate locations.

Adequate space provides for the physical and mental health of occupants. Crowded conditions have a negative impact on occupants by preventing easy movement

INTERNATIONAL CODE COUNCIL®
Copyright © 2018 ICC. ALL RIGHTS RESERVED. Accessed by Jim Davis (JDavis@ShakopeeMN.gov), (City of Shakopee) Order Number #101054067 on Mar 17, 2021 01:42 PM (PDT) pursuant to License Agreement with ICC. No further reproduction, no further reproductions by any third party, or distribution authorized. Single user only, copying and networking prohibited. ANY UNAUTHORIZED REPRODUCTION OR DISTRIBUTION IS A VIOLATION OF THE FEDERAL COPYRIGHT ACT AND THE LICENSE AGREEMENT, AND SUBJECT TO CIVIL AND CRIMINAL PENALTIES THEREUNDER.

101054067

throughout the dwelling. Crowded conditions may also lead to accidents and injuries. Additionally, occupants are subjected to an increase in the spread of disease and germs through sneezing and coughing.

Overcrowding may also have a negative effect on mental health.

Purpose

Minimum light, ventilation and space requirements are based on the physiological and psychological impact of these factors on building occupants. The purpose of Chapter 4 is to set forth these requirements in the code and to establish the minimum environment for occupiable and habitable buildings.

SECTION 401
GENERAL

401.1 Scope. The provisions of this chapter shall govern the minimum conditions and standards for light, *ventilation* and space for occupying a structure.

❖ Buildings must comply with minimum criteria and conditions for light, ventilation and space. Specific requirements are outlined in this chapter.

401.2 Responsibility. The *owner* of the structure shall provide and maintain light, *ventilation* and space conditions in compliance with these requirements. A person shall not occupy as *owner-occupant*, or permit another person to occupy, any *premises* that do not comply with the requirements of this chapter.

❖ The owner is responsible for complying with all light, ventilation and space requirements established in this chapter. A noncomplying structure cannot be occupied until it is brought into compliance with the criteria.

401.3 Alternative devices. In lieu of the means for natural light and *ventilation* herein prescribed, artificial light or mechanical *ventilation* complying with the *International Building Code* shall be permitted.

❖ Light and ventilation by artificial methods are permitted, such as electric lighting instead of natural light and mechanical ventilation instead of natural ventilation. Electric lighting is permitted to replace the natural light requirements of Section 402. Mechanical ventilation is permitted to replace the natural ventilation requirements of Section 403. Any alternative method approved by the code official must also comply with the installation and performance requirements of the building code.

SECTION 402
LIGHT

402.1 Habitable spaces. Every *habitable space* shall have not less than one window of *approved* size facing directly to the outdoors or to a court. The minimum total glazed area for every *habitable space* shall be 8 percent of the floor area of such room. Wherever walls or other portions of a structure face a window of any room and such obstructions are located less than 3 feet (914 mm) from the window and extend to a level above that of the ceiling of the room, such window shall not be deemed to face directly to the outdoors nor to a court and shall not be included as contributing to the required minimum total window area for the room.

Exception: Where natural light for rooms or spaces without exterior glazing areas is provided through an adjoining room, the unobstructed opening to the adjoining room shall be not less than 8 percent of the floor area of the interior room or space, or not less than 25 square feet (2.33 m^2), whichever is greater. The exterior glazing area shall be based on the total floor area being served.

❖ "Habitable space" is defined in Chapter 2. Habitable spaces are those spaces that are normally considered "inhabited" in the course of residential living and provide the four basic characteristics of living, sleeping, eating and cooking. Other spaces, such as halls or utility rooms, are not considered habitable, but would in many instances be considered occupiable.

As stated in Section 401.3, natural lighting is not required if artificial light is provided. Electric lighting is almost always provided. Where electric lighting is provided instead of natural lighting, the code official must rely on a light meter to assess whether the illumination provided meets the criteria in the referenced building code.

All habitable spaces must have one or more windows and the total glazed area must equal at least 8 percent of the floor area of the room served [see Commentary Figure 402.1(1)].

Windows must face directly to the outdoors or to a court. Any window that faces a wall or other obstruction that is less than 3 feet (914 mm) from the window and higher than the ceiling of the room cannot be included in calculating the minimum total window area needed for the room it serves [see Commentary Figure 402.1(2)].

The exception addresses a case where a space (or room) has no glazed area open to the required courts or yards but is adjacent to one that does. The internal room may "borrow" natural lighting from the adjacent space if the opening in the wall between the two spaces is at least 8 percent of the floor area of the interior room but not less than 25 square feet (2.3 m^2). The required glazed area facing the required court or yard is to be based on the total floor area of all rooms served [see Commentary Figure 402.1(3)].

In Commentary Figure 402.1(3), the glazed area opening onto a court or yard in the space provided

INTERNATIONAL CODE COUNCIL®
Copyright © 2018 ICC. ALL RIGHTS RESERVED. Accessed by Jim Davis (JDavis@ShakopeeMN.gov), (City of Shakopee) Order Number #101054067 on Mar 17, 2021 01:42 PM (PDT) pursuant to License Agreement with ICC. No further reproduction, no further reproductions by any third party, or distribution authorized. Single user only, copying and networking prohibited. ANY UNAUTHORIZED REPRODUCTION OR DISTRIBUTION IS A VIOLATION OF THE FEDERAL COPYRIGHT ACT AND THE LICENSE AGREEMENT, AND SUBJECT TO CIVIL AND CRIMINAL PENALTIES THEREUNDER.

101054067

with the openings must be greater than 8 percent of the total floor areas served; therefore, in Commentary Figure 402.1(3), the glazed area in Space B is required to be equal to or greater than 0.08 (floor area of Space A + floor area of Space B).

The next step is to require the opening between the adjacent spaces to be a minimum of 25 square feet (2.3 m^2), but not less than 0.08 multiplied by the floor area of Space A.

402.2 Common halls and stairways. Every common hall and stairway in residential occupancies, other than in one- and two-family dwellings, shall be lighted at all times with not less than a 60-watt standard incandescent light bulb for each 200 square feet (19 m^2) of floor area or equivalent illumination, provided that the spacing between lights shall not be greater than 30 feet (9144 mm). In other than residential occupancies, interior and exterior means of egress, stairways shall be illuminated at all times the building space served by the means of egress is occupied with not less than 1 footcandle (11 lux) at floors, landings and treads.

❖ This section is intended to establish a minimum level of lighting in common halls and stairs of residential occupancies, such as apartment buildings. Adequate lighting in hallways and stairs is essential for safe exiting in a fire emergency, reduces the chance of injury due to falls during normal use and helps deter crime.

This section contains a prescriptive requirement [60-watt lightbulbs for every 200 square feet (19 m^2)] for ease of application and enforcement (see Commentary Figure 402.2). It assumes a typical ceiling height of not more than 10 feet (3048 mm). Equivalent illumination by means other than 60-watt incandescent bulbs is explicitly permitted, and the code official would establish equivalency by judgment or by actually measuring with a light meter. This lighting is required to be provided at all times, since residential buildings are typically occupied at all times.

In all occupancy groups other than residential, a lower, minimum level of lighting [1 footcandle (11 lux)] is required at all times when the building is occupied. The [1 footcandle (11 lux)] threshold is consistent with the *International Fire Code*® (IFC®) and the *International Building Code*® (IBC®) for acceptable lighting in means of egress components.

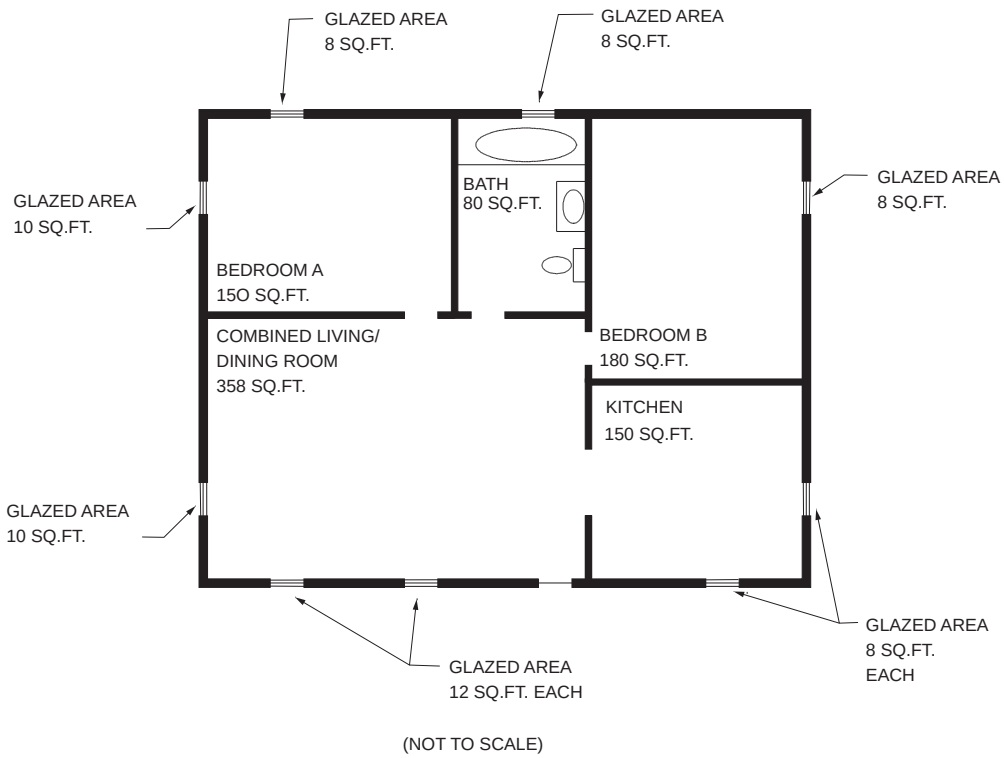

IN THE ABOVE EXAMPLE, ALL ROOMS EXCEPT BEDROOM B HAVE SUFFICIENT WINDOW AREA EQUAL TO AT LEAST 8 PERCENT OF THE ROOMS' FLOOR AREA. BEDROOM B IS 180 SQ.FT. IN AREA, BUT THE WINDOW IS ONLY 8 SQ.FT. BEDROOM B REQUIRES A MINIMUM WINDOW AREA OF 14.4 SQ.FT.; THEREFORE, EITHER ANOTHER WINDOW MUST BE INSTALLED OR THE EXISTING WINDOW MUST BE REPLACED WITH A LARGER WINDOW.

For SI: 1 square foot = 0.0929 m^2.

Commentary Figure 402.1(1)
DETERMINATION OF MINIMUM GLAZED AREA

INTERNATIONAL CODE COUNCIL®
Copyright © 2018 ICC. ALL RIGHTS RESERVED. Accessed by Jim Davis (JDavis@ShakopeeMN.gov), (City of Shakopee) Order Number #101054067 on Mar 17, 2021 01:42 PM (PDT) pursuant to License Agreement with ICC. No further reproduction, no further reproductions by any third party, or distribution authorized. Single user only, copying and networking prohibited. ANY UNAUTHORIZED REPRODUCTION OR DISTRIBUTION IS A VIOLATION OF THE FEDERAL COPYRIGHT ACT AND THE LICENSE AGREEMENT, AND SUBJECT TO CIVIL AND CRIMINAL PENALTIES THEREUNDER.

101054067

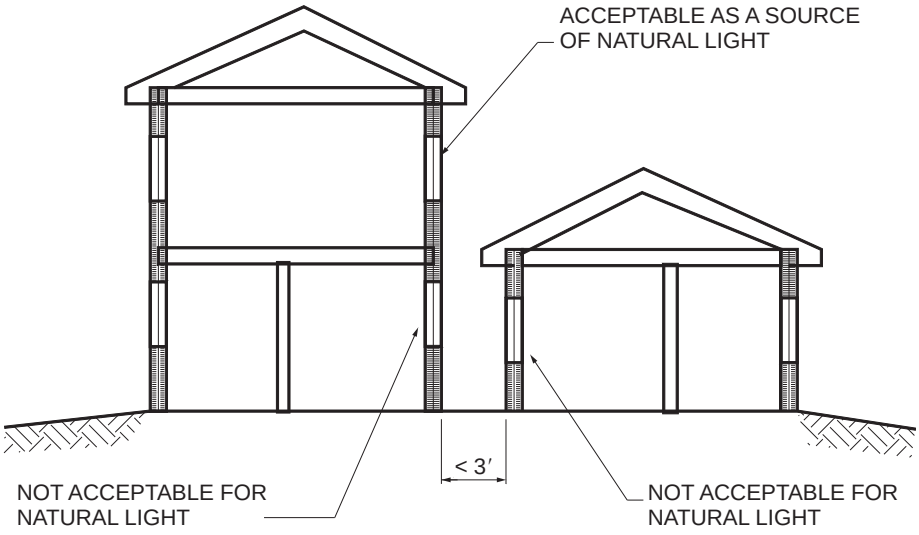

IN THE DIAGRAM ABOVE, THE FIRST-FLOOR WINDOWS FACING EACH OTHER ARE NOT ACCEPTABLE FOR PROVIDING NATURAL LIGHT TO THEIR ROOMS. THE WINDOWS MUST FACE AN OPEN SPACE AT LEAST 3 FEET AWAY FROM THE WINDOW. OTHER METHODS OF ACCOMMODATING NATURAL LIGHT REQUIREMENTS MUST BE CONSIDERED. PERHAPS AN INTERIOR WALL CAN BE REMOVED TO COMBINE TWO ROOMS OR A WINDOW MAY BE RELOCATED TO ANOTHER LOCATION THAT PROVIDES UNOBSTRUCTED LIGHT.

For SI: 1 foot = 304.8 mm.

Commentary Figure 402.1(2)
DETERMINATION OF NATURAL LIGHT SOURCES

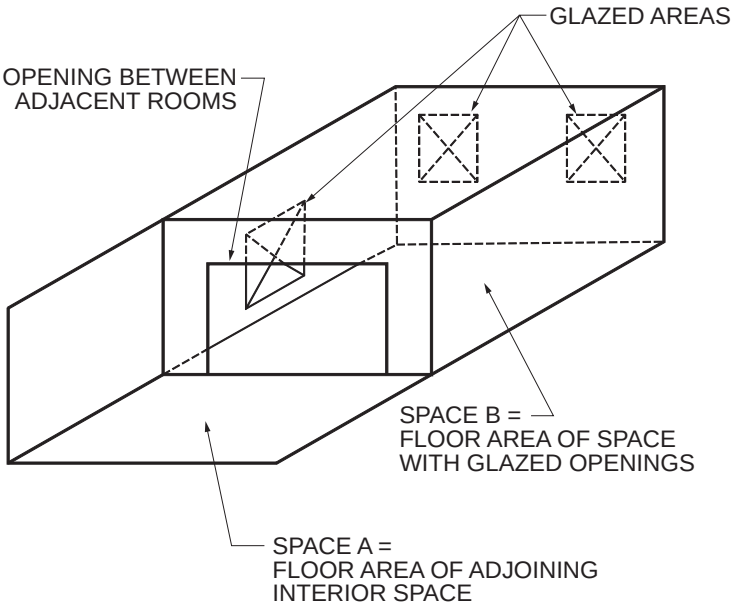

Commentary Figure 402.1(3)
NATURAL LIGHT FROM ADJACENT SPACE

INTERNATIONAL CODE COUNCIL®
Copyright © 2018 ICC. ALL RIGHTS RESERVED. Accessed by Jim Davis (JDavis@ShakopeeMN.gov), (City of Shakopee) Order Number #101054067 on Mar 17, 2021 01:42 PM (PDT) pursuant to License Agreement with ICC. No further reproduction, no further reproductions by any third party, or distribution authorized. Single user only, copying and networking prohibited. ANY UNAUTHORIZED REPRODUCTION OR DISTRIBUTION IS A VIOLATION OF THE FEDERAL COPYRIGHT ACT AND THE LICENSE AGREEMENT, AND SUBJECT TO CIVIL AND CRIMINAL PENALTIES THEREUNDER.

101054067

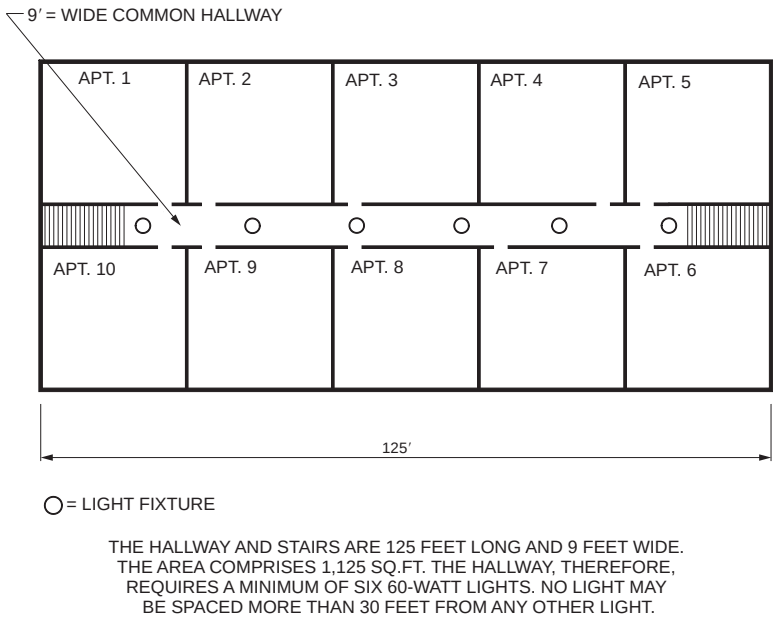

For SI: 1 foot = 304.8 mm, 1 square foot = 0.0929 m^2.

Commentary Figure 402.2
COMMON HALLWAY LIGHTING

402.3 Other spaces. Other spaces shall be provided with natural or artificial light sufficient to permit the maintenance of sanitary conditions, and the safe *occupancy* of the space and utilization of the appliances, equipment and fixtures.

❖ No specific criteria for minimum light and ventilation are established for other spaces, such as storage and utility rooms, closets and mud rooms. All spaces, however, must have enough light to maintain their cleanliness and to allow for the safe use of appliances, equipment and fixtures located within them.

SECTION 403
VENTILATION

403.1 Habitable spaces. Every *habitable space* shall have not less than one openable window. The total openable area of the window in every room shall be equal to not less than 45 percent of the minimum glazed area required in Section 402.1.

Exception: Where rooms and spaces without openings to the outdoors are ventilated through an adjoining room, the unobstructed opening to the adjoining room shall be not less than 8 percent of the floor area of the interior room or space, but not less than 25 square feet (2.33 m^2). The *ventilation* openings to the outdoors shall be based on a total floor area being ventilated.

❖ As stated in Section 401.3, mechanical ventilation is an acceptable alternative to the natural ventilation requirements in this section. Most detached single-family dwellings utilize natural ventilation. Every habitable room (see the definition of "Habitable space" in Chapter 2) must have one window that can be easily opened to provide natural ventilation. In order to supply adequate natural ventilation, workable windows must be capable of opening to at least 45 percent of the minimum glazed area required for natural light, as established in Section 403.1 (see the definition of "Openable area" in Chapter 2). The openable area should be measured when the window or door is in its full, open position. When determining openable area, only the space between stops or between stops and sash is to be measured. The area of sashes, meeting rails, mullions and muntins is to be deducted (see Commentary Figure 403.1).

The exception allows for rooms to "share" required ventilation openings, as long as there are substantial interior openings between the rooms. The example given in the commentary to Section 402.1 is applicable here.

403.2 Bathrooms and toilet rooms. Every *bathroom* and *toilet room* shall comply with the *ventilation* requirements for *habitable spaces* as required by Section 403.1, except that a window shall not be required in such spaces equipped with a mechanical *ventilation* system. Air exhausted by a mechanical *ventilation* system from a *bathroom* or *toilet room* shall discharge to the outdoors and shall not be recirculated.

❖ All bathrooms and toilet rooms must have windows that conform to the requirements of Section 402.1 for natural light and Section 403.1 for natural ventilation. If a window is not provided or not large enough to comply with the light and ventilation requirements of these two sections, then an approved mechanical vent may be used.

INTERNATIONAL CODE COUNCIL®
Copyright © 2018 ICC. ALL RIGHTS RESERVED. Accessed by Jim Davis (JDavis@ShakopeeMN.gov), (City of Shakopee) Order Number #101054067 on Mar 17, 2021 01:42 PM (PDT) pursuant to License Agreement with ICC. No further reproduction, no further reproductions by any third party, or distribution authorized. Single user only, copying and networking prohibited. ANY UNAUTHORIZED REPRODUCTION OR DISTRIBUTION IS A VIOLATION OF THE FEDERAL COPYRIGHT ACT AND THE LICENSE AGREEMENT, AND SUBJECT TO CIVIL AND CRIMINAL PENALTIES THEREUNDER.

101054067

Mechanical ventilation in dwelling unit bathrooms and toilet rooms is required to exhaust moisture-laden air to the exterior. The vent must not terminate in any attic or other closed space (see Commentary Figure 403.2), which would allow moisture to condense on the building structure and lead to deterioration of the structure.

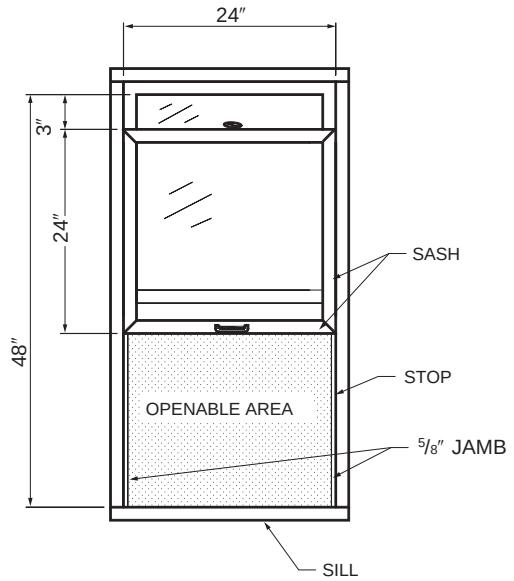

OPENABLE AREA:

HEIGHT: (48″ - 24″ - 3″) = 21″
WIDTH: [24″ - (2 × 5/8″)] = 22¾″

21″ HIGH × 22¾″ WIDE = 3.3 SQ. FT.

For SI: 1 inch = 25.4 mm, 1 square foot = 0.0929 m^2.

Commentary Figure 403.1
DETERMINATION OF OPENABLE AREA

403.3 Cooking facilities. Unless *approved* through the certificate of *occupancy*, cooking shall not be permitted in any *rooming unit* or dormitory unit, and a cooking facility or appliance shall not be permitted to be present in the *rooming unit* or dormitory unit.

Exceptions:

1. Where specifically *approved* in writing by the *code official*.
2. Devices such as coffee pots and microwave ovens shall not be considered cooking appliances.

❖ Unless approval has been granted through a certificate of occupancy, cooking is prohibited in dormitory or rooming units (see the definition of "Rooming unit" in Chapter 2). Cooking equipment is prohibited in these types of rooms, since cooking in sleeping areas may create fire and health hazards, as well as odor and moisture problems.

Exception 1 provides for the allowance of cooking in a rooming unit or a dormitory unit based on written approval as granted by the code official. Such an allowance should take into consideration the types of food to be cooked and the heat source and conditions under which the cooking will be done. Requiring approval in writing verifies that there will be a traceable, verifiable record of the conditions of approval. Such a record is useful in enforcing the conditions of the approval. Exception 2 allows the use of coffee pots and microwave ovens in rooming units and dormitory units. These types of appliances are typically used for short periods of time, and are currently used in hotel and motel units without significant problems.

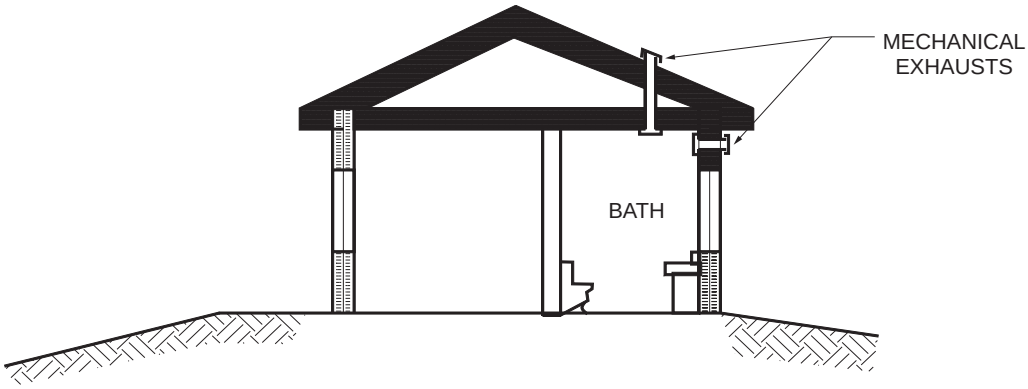

MECHANICAL EXAUST FROM BATHROOMS
MUST TERMINATE OUTSIDE. THE VENT SHOULD NEITHER
RECIRCULATE AIR NOR TERMINATE IN THE
ATTIC OR OTHER INTERIOR SPACE.

Commentary Figure 403.2
BATHROOM EXHAUST

INTERNATIONAL CODE COUNCIL®
Copyright © 2018 ICC. ALL RIGHTS RESERVED. Accessed by Jim Davis (JDavis@ShakopeeMN.gov), (City of Shakopee) Order Number #101054067 on Mar 17, 2021 01:42 PM (PDT) pursuant to License Agreement with ICC. No further reproduction, no further reproductions by any third party, or distribution authorized. Single user only, copying and networking prohibited. ANY UNAUTHORIZED REPRODUCTION OR DISTRIBUTION IS A VIOLATION OF THE FEDERAL COPYRIGHT ACT AND THE LICENSE AGREEMENT, AND SUBJECT TO CIVIL AND CRIMINAL PENALTIES THEREUNDER.

101054067

403.4 Process ventilation. Where injurious, toxic, irritating or noxious fumes, gases, dusts or mists are generated, a local exhaust *ventilation* system shall be provided to remove the contaminating agent at the source. Air shall be exhausted to the exterior and not be recirculated to any space.

❖ A mechanical vent, hood or cabinet is required where any process creates potentially hazardous fumes, gases or dust. The ventilation has to be located at the source of the contamination and must exhaust directly to the exterior. The criteria for new exhaust systems are found in the *International Mechanical Code*® (IMC®). If the exhausted air contains dust, dirt, chemicals or other contaminants, the exhaust may require additional treatment to prevent contamination of the exterior air (see Commentary Figure 403.4).

403.5 Clothes dryer exhaust. Clothes dryer exhaust systems shall be independent of all other systems and shall be exhausted outside the structure in accordance with the manufacturer's instructions.

Exception: Listed and *labeled* condensing (ductless) clothes dryers.

❖ Clothes dryers are prohibited from exhausting into other ventilation or exhaust systems. Clothes dryers create large volumes of lint, dust and moisture that will clog or corrode any system not designed for this type of exhaust. Additionally, the exhaust gases are hot and may contain combustion products. Improper or inadequate provisions for exhaust may create a fire and health hazard.

Manufacturers' installation instructions must be followed when exhausting clothes dryers. The exception recognizes condensing ductless clothes dryers. Typically, in a condenser dryer, there are two separate loops. The inside loop of air that is sealed from the outside loop of environment air from within the drum is heated, then blown through the tumbling clothes, then the moisture-laden air is passed through a heat exchanger, where the water recondenses. The same dry air is then reheated, where it is again blown through the drum and clothes, and the cycle begins again.

The outside loop in a condenser dryer consists of either air or water. Some condenser dryer models are air-cooled, and use the ambient room air as a heat sink by blowing it across the outside of the heat exchanger. These dryers will tend to heat the indoor air in one's laundry room significantly. Note, however, that only heat is released, and all moisture is contained within the unit. The condensed water can be either pumped away to a drain line or stored in a container within the dryer to be emptied later.

SECTION 404
OCCUPANCY LIMITATIONS

404.1 Privacy. *Dwelling units*, hotel units, *housekeeping units*, *rooming units* and dormitory units shall be arranged to provide privacy and be separate from other adjoining spaces.

❖ Privacy is a fundamental psychological need. Every person needs a space to relax, sleep and dress that is separate from public or common rooms. Walls, corridors and doors should be arranged to offer the occupants their own private space.

404.2 Minimum room widths. A habitable room, other than a kitchen, shall be not less than 7 feet (2134 mm) in any plan dimension. Kitchens shall have a minimum clear passageway of 3 feet (914 mm) between counterfronts and appliances or counterfronts and walls.

❖ To prevent the use of inadequately sized rooms for living space, the code establishes a minimum dimen-

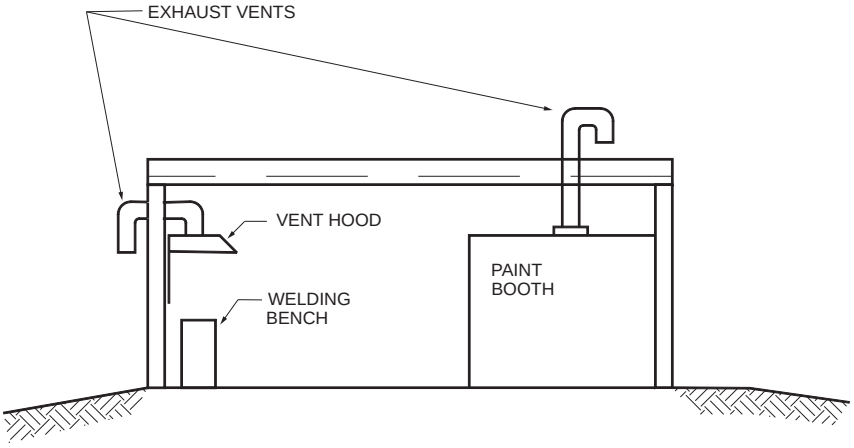

PROCESS VENTILATION MUST BE LOCATED IN A POSITION TO PREVENT FUMES FROM PERMEATING THE GENERAL ATMOSPHERE OF THE INTERIOR SPACES.

Commentary Figure 403.4
PROCESS VENTILATION

INTERNATIONAL CODE COUNCIL®
Copyright © 2018 ICC. ALL RIGHTS RESERVED. Accessed by Jim Davis (JDavis@ShakopeeMN.gov), (City of Shakopee) Order Number #101054067 on Mar 17, 2021 01:42 PM (PDT) pursuant to License Agreement with ICC. No further reproduction, no further reproductions by any third party, or distribution authorized. Single user only, copying and networking prohibited. ANY UNAUTHORIZED REPRODUCTION OR DISTRIBUTION IS A VIOLATION OF THE FEDERAL COPYRIGHT ACT AND THE LICENSE AGREEMENT, AND SUBJECT TO CIVIL AND CRIMINAL PENALTIES THEREUNDER.

101054067

sion of 7 feet (2134 mm) at the narrowest width of all habitable rooms, except kitchens. Narrow rooms do not allow for the installation of furniture without unduly obstructing passageways through the rooms.

Kitchens require only 3 feet (914 mm) of clearance between countertops and appliances or countertops and walls. Kitchens are not expected to be occupied for long periods of time, nor is it expected that kitchens will be occupied by a large number of persons at any one time.

404.3 Minimum ceiling heights. *Habitable spaces*, hallways, corridors, laundry areas, *bathrooms*, *toilet rooms* and habitable *basement* areas shall have a minimum clear ceiling height of 7 feet (2134 mm).

Exceptions:

1. In one- and two-family dwellings, beams or girders spaced not less than 4 feet (1219 mm) on center and projecting not greater than 6 inches (152 mm) below the required ceiling height.
2. *Basement* rooms in one- and two-family dwellings occupied exclusively for laundry, study or recreation purposes, having a minimum ceiling height of 6 feet 8 inches (2033 mm) with a minimum clear height of 6 feet 4 inches (1932 mm) under beams, girders, ducts and similar obstructions.
3. Rooms occupied exclusively for sleeping, study or similar purposes and having a sloped ceiling over all or part of the room, with a minimum clear ceiling height of 7 feet (2134 mm) over not less than one-third of the required minimum floor area. In calculating the floor area of such rooms, only those portions of the floor area with a minimum clear ceiling height of 5 feet (1524 mm) shall be included.

❖ Sufficient ceiling heights are necessary to provide an adequate volume of air for occupants in closed spaces and to provide for their psychological well-being. The height requirements are established by this section.

To accommodate various conditions, the code establishes exceptions that permit a reduction in ceiling height within limited conditions. These exceptions include the following:

Exception 1 makes provisions for beams and girders to extend into the required minimum height. This is consistent with the IBC and the *International Residential Code*® (IRC®) requirements, which allow this type of projection to accommodate structural members.

Exception 2 is included to permit the use of existing basements with low headroom. It is anticipated that these rooms will be used only occasionally and will not adversely affect the occupants' health or safety.

Exception 3 is included to accommodate the many $1^1/_2$-story houses that have the sloped attic area finished into bedrooms and similar uses.

Similar to the previous exception, the 7-foot-high (2134 mm) ceiling must extend over one-third of the required area established in Section 404.4.1. Thus, if a room is larger than the minimum required size for its use, the 7-foot-high (2134 mm) portion may be less than one-third of the room's actual floor area.

Example: A bedroom of 175 square feet (16.3 m^2) would be required to have a 7-foot-high (2134 mm) ceiling over not less than 23.3 square feet (2.2 m^2) of the room area. The minimum required area of a bedroom is 70 square feet (6.5 m^2) (see Section 404.4.1); one-third of the required 70 square feet (6.5 m^2) is 23.3 square feet (2.2 m^2).

404.4 Bedroom and living room requirements. Every *bedroom* and living room shall comply with the requirements of Sections 404.4.1 through 404.4.5.

❖ The size of bedrooms and living rooms in a dwelling unit are determining factors in the comfort and safety of occupants. As such, the code establishes minimum sizes and restricts certain configurations in regard to bathrooms, means of egress and other habitable rooms.

404.4.1 Room area. Every living room shall contain not less than 120 square feet (11.2 m^2) and every bedroom shall contain not less than 70 square feet (6.5 m^2) and every bedroom occupied by more than one person shall contain not less than 50 square feet (4.6 m^2) of floor area for each occupant thereof.

❖ The smallest living room allowed is 120 square feet (11.1 m^2). Utilizing the minimum room width of 7 feet (2134 mm) would result in a living room size of approximately 7 feet by 17 feet (2134 mm by 5182 mm). A more functional room size would perhaps be 10 feet by 12 feet (3048 mm by 3658 mm). The smallest bedroom allowed is 70 square feet (6.5 m^2). This is barely enough space for a regular-sized (twin) bed and dresser. If a bedroom is intended to accommodate more than one person, the room must have at least 50 square feet (4.6 m^2) per person. A sleeping room for two people must contain at least 100 square feet (9.3 m^2), for three, 150 square feet (13.9 m^2) and so on. Inadequate sleeping space may increase the spread of communicable diseases, reduce privacy and provide insufficient space for clothes, furniture and other personal belongings. See the commentary to Section 404.5 for examples of the application of the requirements of this section.

404.4.2 Access from bedrooms. *Bedrooms* shall not constitute the only means of access to other *bedrooms* or *habitable spaces* and shall not serve as the only means of egress from other *habitable spaces*.

Exception: Units that contain fewer than two *bedrooms*.

❖ Every occupant must be provided with privacy in his or her sleeping room. The need for privacy may lead occupants to lock or barricade doors in certain situations; therefore, if the only access to other habitable spaces or the means of egress is through a bedroom, there is a possibility that the only way out of a dwelling unit may be blocked in an emergency situation. Even without an emergency, occupants may be seri-

INTERNATIONAL CODE COUNCIL®
Copyright © 2018 ICC. ALL RIGHTS RESERVED. Accessed by Jim Davis (JDavis@ShakopeeMN.gov), (City of Shakopee) Order Number #101054067 on Mar 17, 2021 01:42 PM (PDT) pursuant to License Agreement with ICC. No further reproduction, no further reproductions by any third party, or distribution authorized. Single user only, copying and networking prohibited. ANY UNAUTHORIZED REPRODUCTION OR DISTRIBUTION IS A VIOLATION OF THE FEDERAL COPYRIGHT ACT AND THE LICENSE AGREEMENT, AND SUBJECT TO CIVIL AND CRIMINAL PENALTIES THEREUNDER.

101054067

ously inconvenienced in their movement about the dwelling unit. Bedrooms, therefore, must be arranged so that other occupants and guests do not have to pass through one bedroom to get to another bedroom or other habitable spaces (see Commentary Figure 404.4.2). Additionally, dwelling units must be configured such that occupants can egress from any habitable room in the dwelling unit without passing through a bedroom. The exception would permit a dwelling unit with only one bedroom to have an arrangement where the only access to habitable rooms or the means of egress is through the bedroom. It is assumed in this case that only the occupants of the bedroom will require access to other rooms or the means of egress.

404.4.3 Water closet accessibility. Every *bedroom* shall have access to not less than one water closet and one lavatory without passing through another *bedroom*. Every *bedroom* in a *dwelling unit* shall have access to not less than one water closet and lavatory located in the same story as the *bedroom* or an adjacent story.

❖ Every occupant of a bedroom must have access to a water closet without having to pass through another room used as a bedroom. Readily accessible water closets are important for privacy. Occupants should be able to use bathroom facilities without compromising their modesty or the privacy of the occupants in a bedroom. The requirement that every bedroom be served by a water closet and lavatory on the same floor level or on an adjacent level is considered an acceptable minimum standard for the convenience of occupants.

404.4.4 Prohibited occupancy. Kitchens and nonhabitable spaces shall not be used for sleeping purposes.

❖ The code prohibits kitchens, interior public areas and nonhabitable spaces from being used as bedrooms. These spaces provide neither privacy nor safety. Such rooms may also lack adequate light, ventilation, fire exits and sufficient habitable space.

This section provides the code official with another tool to control overcrowding problems.

404.4.5 Other requirements. *Bedrooms* shall comply with the applicable provisions of this code including, but not limited to, the light, *ventilation*, room area, ceiling height and room width requirements of this chapter; the plumbing facilities and water-heating facilities requirements of Chapter 5; the heating facilities and electrical receptacle requirements of Chapter 6; and the smoke detector and emergency escape requirements of Chapter 7.

❖ Sections 404.4.1 through 404.4.5 do not contain all the code requirements that pertain to bedrooms. Bedrooms are habitable rooms (see the definition and commentary for "Habitable room" in Chapter 2) and as such are subject to all the code requirements that apply to habitable rooms. The purpose of this section

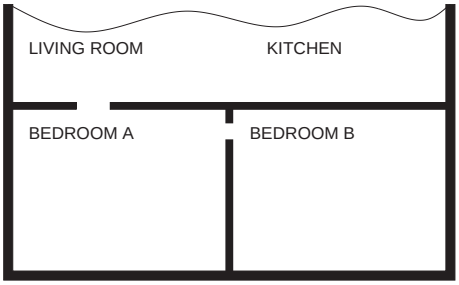

THIS BEDROOM ARRANGEMENT IS NOT ACCEPTABLE. OCCUPANT MUST PASS THROUGH BEDROOM A TO REACH BEDROOM B.

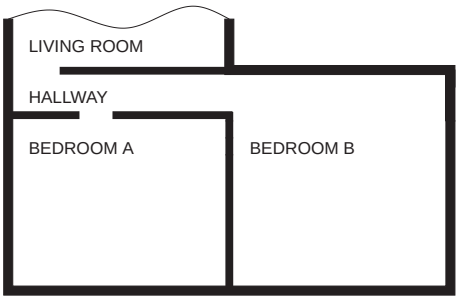

THIS BEDROOM ARRANGEMENT IS ACCEPTABLE. THE OCCUPANT OF BEDROOM B CAN GAIN ACCESS TO THE BEDROOM WITHOUT PASSING THROUGH BEDROOM A.

Commentary Figure 404.4.2
BEDROOM ACCESS

INTERNATIONAL CODE COUNCIL®
Copyright © 2018 ICC. ALL RIGHTS RESERVED. Accessed by Jim Davis (JDavis@ShakopeeMN.gov), (City of Shakopee) Order Number #101054067 on Mar 17, 2021 01:42 PM (PDT) pursuant to License Agreement with ICC. No further reproduction, no further reproductions by any third party, or distribution authorized. Single user only, copying and networking prohibited. ANY UNAUTHORIZED REPRODUCTION OR DISTRIBUTION IS A VIOLATION OF THE FEDERAL COPYRIGHT ACT AND THE LICENSE AGREEMENT, AND SUBJECT TO CIVIL AND CRIMINAL PENALTIES THEREUNDER.

101054067

is to alert the code user to requirements for bedrooms that are located in other sections and chapters of the code. In particular, see the following sections of the code and the associated commentary:

- Section 402.1 for minimum light requirements.
- Section 403.1 for minimum ventilation requirements.
- Section 404.2 for minimum room width.
- Section 404.3 for minimum ceiling height.
- Section 503.2, which prohibits a toilet room from being the only passageway to a hall or other space from a bedroom.
- Section 505.4, which requires a provision for combustion air in bedrooms that contain a fuel-burning water heater.
- Sections 602.2 and 602.5 for minimum heat required in a bedroom.
- Section 605.2, which requires at least two separate and remote receptacle outlets in each bedroom.
- Section 702.4 for required emergency escape windows and doors in bedrooms.
- Section 704 for required smoke detectors in the vicinity of the bedrooms.

404.5 Overcrowding. Dwelling units shall not be occupied by more occupants than permitted by the minimum area requirements of Table 404.5.

❖ Overcrowding is often a problem in rental properties and in small, single-family dwellings. It can create serious problems; for example, disease spreads more easily, privacy is lost, mental health is affected and buildings are subject to more abuse and wear. Overcrowding can have a destructive effect on a whole neighborhood if it takes place in several houses on the same block or in several units in the same apartment building. Reducing overcrowding will reduce related health and safety hazards.

The code requires all types of dwelling units to comply with occupancy area requirements. There is no exception for owner-occupied houses; however, overcrowding of owner-occupied, single-family residences requires the careful thought and judgement of the code official to determine an appropriate course of action.

Proving that a building is overcrowded may be difficult. Tenants may lie about the number of occupants in their unit to avoid eviction. To determine the number of occupants, the code official may try to count beds or the names on mailboxes. Neighbors may also provide valuable information about the number of occupants and may be able to tell when the occupants are most likely to be home. It may be necessary to conduct inspections during evening hours in order to find an adult occupant at home. School enrollment records can also provide information on overcrowding.

Some communities have laws requiring an occupancy permit to be issued before a dwelling unit can be occupied. This allows the number of occupants shown on the application to be checked against the maximum occupancy of the dwelling unit as determined by an inspection [see Commentary Figure 404.5(1)].

Some floor plan arrangements would allow the dining and living room areas to be considered as combined dining/living/sleeping rooms. To illustrate the alternative analytical approach for the maximum number of occupants, consider the following example in which two analyses will be made: the first assumes only the three bedrooms are used for sleeping purposes; the second assumes the living/dining area is to be counted as providing sleeping space [see Commentary Figure 404.5(2) for an example of an arrangement where the access to the kitchen is not through the dining/living room]. The requirement of Section 404.4.2, therefore, would be met and the maximum occupant load would be the highest of the following two analyses.

ANALYSIS 1 OCCUPANT LOAD ANALYSIS WITH NO COMBINED SLEEPING ROOM USAGE

1. Sleeping space: Section 404.4.1 indicates that 70 square feet (6.5 m^2) is required for a room occupied by one person and 50 square feet (4.6 m^2) per person is required for a room occupied by more than one person. In this example, we arrive at the following:

SLEEPING AREAS	ACTUAL AREA (SQUARE FEET)	ALLOWABLE NO. OF OCCUPANTS
Bedroom 1	113	2
Bedroom 2	127	2
Bedroom 3	92	1

For SI: 1 square foot = 0.0929 m^2.

At this point the maximum possible occupant load is five. It can be no higher due to lack of additional sleeping space.

2. Living, dining and kitchen space: Table 404.5 establishes the minimum required areas that will accommodate various numbers of occupants. By using Table 404.5, the following is derived:

SPACE	ACTUAL AREA (SQUARE FEET)	ALLOWABLE NO. OF OCCUPANTS
Living room	220	6 or more
Dining room	100	6 or more

For SI: 1 square foot = 0.0929 m^2.

3. Maximum allowable number of occupants: The actual living, dining and kitchen areas provide the maximum required space for six or more occupants; therefore, the maximum allowable number of occupants based on this analysis, which is five occupants, is governed by the sleeping space provided.

INTERNATIONAL CODE COUNCIL®
Copyright © 2018 ICC. ALL RIGHTS RESERVED. Accessed by Jim Davis (JDavis@ShakopeeMN.gov), (City of Shakopee) Order Number #101054067 on Mar 17, 2021 01:42 PM (PDT) pursuant to License Agreement with ICC. No further reproduction, no further reproductions by any third party, or distribution authorized. Single user only, copying and networking prohibited. ANY UNAUTHORIZED REPRODUCTION OR DISTRIBUTION IS A VIOLATION OF THE FEDERAL COPYRIGHT ACT AND THE LICENSE AGREEMENT, AND SUBJECT TO CIVIL AND CRIMINAL PENALTIES THEREUNDER.

101054067

In this case, the living, dining and kitchen areas provide the minimum required space for any number of occupants. As such, if Bedroom 3 was 100 square feet (9.3 m^2) rather than 90 square feet (8.4 m^2), the maximum allowable occupant load would be six, rather than five, because Bedroom 3 would provide adequate sleeping space for two occupants.

ANALYSIS 2 OCCUPANT LOAD ANALYSIS WITH COMBINED LIVING/DINING/SLEEPING SPACE

It was previously determined that the bedrooms provide sleeping space for five occupants and the living, dining and kitchen areas are adequate for any number of occupants; however, the code does not prohibit the dual use of a room as living/sleeping or living/dining/sleeping, as long as the room meets the requirements for each intended use. In this example, the living/dining room could be considered a combined living/dining/sleeping room.

When determining the maximum occupant load for a combined living/sleeping or living/dining/sleeping room, Section 404.5.1 mandates that the minimum areas required by Table 404.5 are not to be included as sleeping areas; therefore, if the combined living/dining/sleeping room were used by one person for sleeping, at least 70 square feet (6.5 m^2) is necessary (Section 404.4.1), leaving 250 square feet (23.2 m^2) available for combined living/dining purposes [320 square feet (29.7 m^2) total minus 70 square feet (6.5

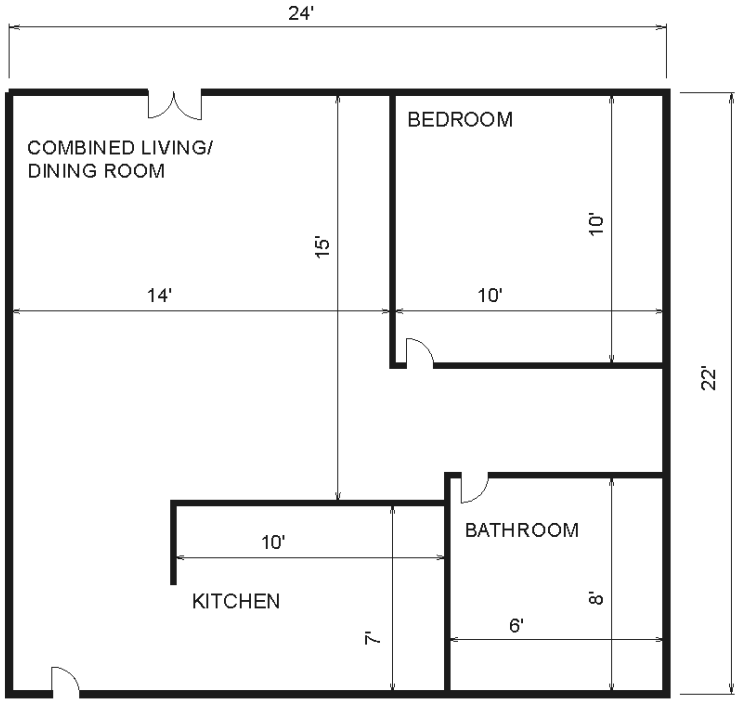

MAXIMUM OCCUPANCY ALLOWED:

1. COMBINED LIVING/DINING ROOM = 210 SQ.FT.
   THIS SPACE WOULD ACCOMMODATE NO MORE THAN FIVE OCCUPANTS IN ACCORDANCE WITH TABLE 404.5 AND SECTION 404.5.2.

2. KITCHEN = 70 SQ.FT.
   THIS SPACE WOULD ACCOMMODATE AN UNLIMITED NUMBER OF OCCUPANTS IN ACCORDANCE WITH TABLE 404.5.

3. BEDROOM = 100 SQ.FT.
   THIS SPACE WOULD ACCOMMODATE ONE OR TWO OCCUPANTS IN ACCORDANCE WITH TABLE 404.5.

BECAUSE THE BEDROOM WILL ONLY PERMIT A MAXIMUM OCCUPANCY OF TWO, THAT IS THE MAXIMUM OCCUPANCY FOR THIS ENTIRE UNIT. THE OCCUPANCY IS LIMITED TO THE MAXIMUM PERMITTED BY THE LEAST AREA PROVIDED IN ONE OF THE CATEGORIES IN TABLE 404.5.

For SI: 1 foot = 304.8 mm, 1 square foot = 0.0929 m^2.

Commentary Figure 404.5(1)
MAXIMUM OCUPANCY LOAD IN DWELLINGS

INTERNATIONAL CODE COUNCIL®
Copyright © 2018 ICC. ALL RIGHTS RESERVED. Accessed by Jim Davis (JDavis@ShakopeeMN.gov), (City of Shakopee) Order Number #101054067 on Mar 17, 2021 01:42 PM (PDT) pursuant to License Agreement with ICC. No further reproduction, no further reproductions by any third party, or distribution authorized. Single user only, copying and networking prohibited. ANY UNAUTHORIZED REPRODUCTION OR DISTRIBUTION IS A VIOLATION OF THE FEDERAL COPYRIGHT ACT AND THE LICENSE AGREEMENT, AND SUBJECT TO CIVIL AND CRIMINAL PENALTIES THEREUNDER.

101054067

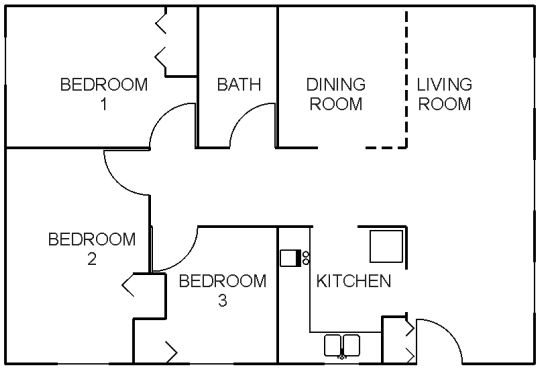

AREA BREAKDOWN

LIVING ROOM = 220 sq.ft.
DINING ROOM = 100 sq.ft.
KITCHEN = 90 sq.ft.
BEDROOM 1 = 113 sq.ft.
BEDROOM 2 = 127 sq.ft.
BEDROOM 3 = 92 sq.ft.

LARGE THREE-BEDROOM APARTMENT
NOT TO SCALE

For SI: 1 square foot = 0.0929 m^2.

Commentary Figure 404.5(2)
COMBINED LIVING/DINING/SLEEPING ROOM EXAMPLE

m^2) equals 250 square feet (23.2 m^2)]. Table 404.5 and Section 404.5.2 would allow a combined living/dining room of 250 square feet (23.2 m^2) to accommodate any number of occupants (six or more), which is the same as the first example. The total number of occupants for which a sleeping area is provided is now a maximum of six (the bedrooms accommodate five and the combined living/dining/sleeping room accommodates one); therefore, the maximum allowable occupant load based on this analysis would be six.

In this example the combined living/dining/sleeping room would be subject to all requirements for sleeping areas, including emergency escape windows (Section 702.4) and smoke detectors (Section 704).

TABLE 404.5
MINIMUM AREA REQUIREMENTS

SPACE	MINIMUM AREA IN SQUARE FEET		
	1-2 occupants	3-5 occupants	6 or more occupants
Living room[a, b]	120	120	150
Dining room[a, b]	No requirement	80	100
Bedrooms	Shall comply with Section 404.4.1		

For SI: 1 square foot = 0.0929 m^2.

a. See Section 404.5.2 for combined living room/dining room spaces.

b. See Section 404.5.1 for limitations on determining the minimum occupancy area for sleeping purposes.

❖ Table 404.5 establishes the minimum room sizes and the maximum occupant loads for living spaces. The code official is to use this table to determine if a residence is overcrowded. See the commentary to Section 404.5 for examples of the application of this table.

404.5.1 Sleeping area. The minimum occupancy area required by Table 404.5 shall not be included as a sleeping area in determining the minimum occupancy area for sleeping purposes. Sleeping areas shall comply with Section 404.4.

❖ The purpose of this section is to prohibit the dual use of dining rooms and living rooms as sleeping rooms, unless they are of sufficient size to incorporate the minimum required space for sleeping, in addition to the minimum required space for the dining or living room areas listed in Table 404.5. For example, if a dwelling is occupied by five people and one person is using the living room as a sleeping area, the minimum required size of the living room would be 190 square feet (17.7 m^2). This is based on 120 square feet (11.1 m^2) for the living room, in accordance with Table 404.5, and 70 square feet (6.5 m^2) for the single-occupant sleeping area, in accordance with Section 404.4.1.

The code does not prohibit a living or dining room from serving a dual purpose as a sleeping area; however, the room must be sized to accommodate both functions. See the commentary to Section 404.5 for additional examples of calculating the maximum allowable occupant load in dwellings where certain rooms are used for dual purposes.

404.5.2 Combined spaces. Combined living room and dining room spaces shall comply with the requirements of Table 404.5 if the total area is equal to that required for separate rooms and if the space is located so as to function as a combination living room/dining room.

❖ When a living room and a dining room are combined into one room, the combined area must equal the sum of the minimum required area of each separate room established by Table 404.5. See Analysis 2 in the commentary to Section 404.5 for further illustration.

INTERNATIONAL CODE COUNCIL®
Copyright © 2018 ICC. ALL RIGHTS RESERVED. Accessed by Jim Davis (JDavis@ShakopeeMN.gov), (City of Shakopee) Order Number #101054067 on Mar 17, 2021 01:42 PM (PDT) pursuant to License Agreement with ICC. No further reproduction, no further reproductions by any third party, or distribution authorized. Single user only, copying and networking prohibited. ANY UNAUTHORIZED REPRODUCTION OR DISTRIBUTION IS A VIOLATION OF THE FEDERAL COPYRIGHT ACT AND THE LICENSE AGREEMENT, AND SUBJECT TO CIVIL AND CRIMINAL PENALTIES THEREUNDER.

101054067

404.6 Efficiency unit. Nothing in this section shall prohibit an efficiency living unit from meeting the following requirements:

1. A unit occupied by not more than one occupant shall have a minimum clear floor area of 120 square feet (11.2 m^2). A unit occupied by not more than two *occupants* shall have a minimum clear floor area of 220 square feet (20.4 m^2). A unit occupied by three *occupants* shall have a minimum clear floor area of 320 square feet (29.7 m^2). These required areas shall be exclusive of the areas required by Items 2 and 3.
2. The unit shall be provided with a kitchen sink, cooking appliance and refrigeration facilities, each having a minimum clear working space of 30 inches (762 mm) in front. Light and *ventilation* conforming to this code shall be provided.
3. The unit shall be provided with a separate *bathroom* containing a water closet, lavatory and bathtub or shower.
4. The maximum number of *occupants* shall be three.

❖ Efficiency units are typically very small apartments consisting of one or two rooms and a bathroom. Efficiency units that comply with this section are not required to comply with the minimum area requirements for bedrooms in Section 404.4. The total allowable number of occupants in the dwelling, however, is limited to two or three, depending on the area of the unit. The purpose of efficiency units and this section is to provide for combined use of spaces in an economical or "efficient" manner without jeopardizing health or comfort. This is possible because of the limit of total occupants to two or three persons.

Item 1 establishes the minimum required area based on the number of occupants. The item states that these areas are exclusive of the areas required by Items 2 and 3. For example, Item 2 requires that the kitchen be provided with (at minimum) a sink, cooking appliance and refrigerator. It further requires that each of these have a 30-inch (762 mm) clear working space in front of the fixture or appliance. The space taken up by the appliance and the required clear working space of 30 inches (762 mm) in front of each appliance cannot be included in the minimum required floor space in Item 1 (see the last sentence of Item 1). Similarly, the floor area of the bathroom required in Item 3 is not included in the minimum required floor space in Item 1. Lastly, Item 4 establishes the maximum occupant load as three.

There are no minimum floor areas required in the kitchen or bathroom. Having enough space for the required fixtures, appliances and working spaces is considered sufficient to provide functional floor area.

404.7 Food preparation. Spaces to be occupied for food preparation purposes shall contain suitable space and equipment to store, prepare and serve foods in a sanitary manner. There shall be adequate facilities and services for the sanitary disposal of food wastes and refuse, including facilities for temporary storage.

❖ Kitchens must be provided with stoves, ovens, refrigerators, freezers, cabinets, countertops and drawers in sufficient quantity and in a condition that the occupants can store their food safely and at appropriate temperatures to protect the food. All equipment must be constructed and maintained so that it can be cleaned.

Food preparation areas must be provided with garbage disposals or containers that permit the safe temporary storage of garbage and refuse. Containers should be constructed and maintained to prevent insect and rat infestations.

Bibliography

The following resource materials were used in the preparation of the commentary for this chapter of the code:

Basic Principles of Healthful Housing. New York: American Public Health Association, Committee on the Hygiene of Housing, 1939.

IBC—2018, *International Building Code*. Washington, DC: International Code Council, 2017.

IFC—2018, *International Fire Code*. Washington, DC: International Code Council, 2017.

IMC—2018, *International Mechanical Code*. Washington, DC: International Code Council, 2017.

IRC—2018, *International Residential Code*. Washington, DC: International Code Council, 2017.

INTERNATIONAL CODE COUNCIL®

Copyright © 2018 ICC. ALL RIGHTS RESERVED. Accessed by Jim Davis (JDavis@ShakopeeMN.gov), (City of Shakopee) Order Number #101054067 on Mar 17, 2021 01:42 PM (PDT) pursuant to License Agreement with ICC. No further reproduction, no further reproductions by any third party, or distribution authorized. Single user only, copying and networking prohibited. ANY UNAUTHORIZED REPRODUCTION OR DISTRIBUTION IS A VIOLATION OF THE FEDERAL COPYRIGHT ACT AND THE LICENSE AGREEMENT, AND SUBJECT TO CIVIL AND CRIMINAL PENALTIES THEREUNDER.

101054067

INTERNATIONAL CODE COUNCIL®

Copyright © 2018 ICC. ALL RIGHTS RESERVED. Accessed by Jim Davis (JDavis@ShakopeeMN.gov), (City of Shakopee) Order Number #101054067 on Mar 17, 2021 01:42 PM (PDT) pursuant to License Agreement with ICC. No further reproduction, no further reproductions by any third party, or distribution authorized. Single user only, copying and networking prohibited. ANY UNAUTHORIZED REPRODUCTION OR DISTRIBUTION IS A VIOLATION OF THE FEDERAL COPYRIGHT ACT AND THE LICENSE AGREEMENT, AND SUBJECT TO CIVIL AND CRIMINAL PENALTIES THEREUNDER.

101054067

Chapter 5: Plumbing Facilities and Fixture Requirements

General Comments

Chapter 5 establishes the minimum criteria for the installation, maintenance and location of plumbing systems and facilities, including water supply systems, water-heating appliances, sewage disposal systems and related plumbing fixtures. Existing plumbing installations may present unique inspection problems for the code official. Almost all installations are concealed by finished walls, ceilings and floors. The code official must inspect the visible portions of the system and assess the acceptability of the whole installation. To help the code official make suitable judgments, a foundation of basic principles may aid in the enforcement process. The following is a listing of 23 basic principles of environmental sanitation and safety for the design, installation and maintenance of plumbing systems, which establish the fundamental concepts behind health and safety regulations for plumbing systems. Knowing these principles aids in understanding the code requirements, which leads to more effective code enforcement.

Principle No. 1: All Occupied Premises Shall Have Potable Water

All buildings, structures and premises intended for human habitation, occupancy, use or employment, or the preparation or processing of food, drinks or other materials for human consumption shall be provided with an adequate, safe and potable water supply through a safe system of piping to all fixtures, appliances and appurtenances. Such a water supply must not be connected to an unsafe water source, nor shall it be subjected to the hazards of backflow.

Principle No. 2: Adequate Water Required

Plumbing fixtures, devices and appurtenances shall be supplied with water in sufficient volume and at pressures adequate to enable them to function properly and without undue noise under normal conditions of use.

Principle No. 3: Hot Water Required

Hot water shall be supplied to all plumbing fixtures that normally need or require hot water for their proper use and function.

Principle No. 4: Water Conservation

Plumbing shall be designed and adjusted to use the minimum quantity of water consistent with proper performance and cleaning.

Principle No. 5: Dangers of Explosion or Overheating

Devices for heating and storing water shall be designed and installed so as to guard against dangers from explosion or overheating.

Principle No. 6: Use Public Water and Sewers Where Available

Every building with installed plumbing fixtures intended for human habitation, occupancy or use and located where there is a public water supply and sewer service shall have a connection with the water supply and sewer.

Principle No. 7: Required Plumbing Fixtures

Each family dwelling unit shall have at least one water closet, one lavatory, one kitchen-type sink and one bathtub or shower to meet the basic requirements of sanitation and personal hygiene. All other structures for human occupancy or use shall be equipped with sufficient sanitary facilities as prescribed in the code, but with not less than one water closet and lavatory.

Principle No. 8: Smooth Surfaces Required

Plumbing fixtures shall be made of durable, smooth, nonabsorbent and corrosion-resistant material and shall be free from concealed fouling surfaces.

Principle No. 9: Drainage System of Adequate Size

The drainage system shall be designed, constructed and maintained to guard against fouling, deposit of solids and clogging, and with adequate cleanouts arranged so that the pipes may be readily cleaned.

Principle No. 10: Durable Materials and Good Workmanship

The piping of the plumbing system shall be of durable material, free from defective workmanship and designed and constructed so as to give satisfactory service for its reasonably expected life.

Principle No. 11: Liquid Seal Traps Required

Each fixture directly connected to the drainage system shall be equipped with a liquid seal trap.

Principle No. 12: Trap Seals Must Be Protected

The drainage system shall be designed to provide adequate circulation of air in all pipes without danger of siphonage, aspiration or forcing of trap seals under conditions of ordinary use.

INTERNATIONAL CODE COUNCIL®
Copyright © 2018 ICC. ALL RIGHTS RESERVED. Accessed by Jim Davis (JDavis@ShakopeeMN.gov), (City of Shakopee) Order Number #101054067 on Mar 17, 2021 01:42 PM (PDT) pursuant to License Agreement with ICC. No further reproduction, no further reproductions by any third party, or distribution authorized. Single user only, copying and networking prohibited. ANY UNAUTHORIZED REPRODUCTION OR DISTRIBUTION IS A VIOLATION OF THE FEDERAL COPYRIGHT ACT AND THE LICENSE AGREEMENT, AND SUBJECT TO CIVIL AND CRIMINAL PENALTIES THEREUNDER.

101054067

Principle No. 13: Exhaust Foul Air to Outside

Each open vent terminal shall be extended to the outdoors, and be installed so as to minimize the possibilities of clogging and the return of foul air to the building. Note that the *International Plumbing Code*® (IPC®) and the *International Residential Code*® (IRC®) allow for the use of air admittance valves for vent terminals. However, each plumbing drain system must have not less than one vent terminal open to the outdoors.

Principle No. 14: Test the Plumbing System

The plumbing system shall be subjected to tests that will effectively disclose all leaks and defects in the work or material.

Principle No. 15: Exclude Certain Substances from the Plumbing System

Storm, surface or ground water or any substance that will clog or accentuate clogging of pipes, produce explosive mixtures, destroy the pipes or their joints or interfere unduly with the sewage disposal process shall not be allowed to enter the building drainage system.

Principle No. 16: Prevent Contamination

Proper protection shall be provided to prevent contamination of food, water, sterile goods and similar materials from backflow of sewage. When necessary, the fixture, device or appliance shall be connected indirectly with the building drainage system.

Principle No. 17: Light, Heat and Ventilation

A water closet, urinal, lavatory, bathtub or shower shall not be located in a room or compartment that is not properly lighted, heated and ventilated in accordance with accepted practice.

Principle No. 18: Individual Sewage Disposal Systems

If water closets or other plumbing fixtures are installed in buildings where there is not a public sewer, provisions shall be made for disposing of the building sewage by an approved method of treatment and disposal.

Principle No. 19: Prevent Sewer Flooding

Where a plumbing drainage system is subject to backflow of sewage from the public sewer, provisions shall be made to prevent its overflow into the building.

Principle No. 20: Proper Maintenance

Plumbing systems shall be maintained in a safe and serviceable condition from the standpoints of both mechanics and health.

Principle No. 21: Fixtures Shall Be Accessible

Plumbing fixtures shall be installed with regard to spacing so access is provided for their intended use and for cleaning.

Principle No. 22: Structural Safety

Plumbing shall be installed with due regard to preservation of the strength of structural members and prevention of damage to walls and other surfaces through fixture usage.

Principle No. 23: Protect Ground and Surface Water

Sewage or other waste shall not be discharged into surface or subsurface water unless it has first been subjected to an approved form of treatment.

Purpose

Sanitary and clean conditions in occupied buildings depend on certain basic plumbing principles, including providing potable water to a building, providing fixtures to utilize that water and removing waste from the building. Chapter 5 establishes the minimum criteria to verify that these principles are maintained throughout the life of a building.

SECTION 501
GENERAL

501.1 Scope. The provisions of this chapter shall govern the minimum plumbing systems, facilities and plumbing fixtures to be provided.

❖ Buildings must comply with the minimum criteria for the provisions of plumbing systems, facilities and fixtures established by this chapter. Any structure that does not conform to these criteria is in violation of the code and is subject to all penalties established by the jurisdiction as indicated in Section 106.

501.2 Responsibility. The *owner* of the structure shall provide and maintain such plumbing facilities and plumbing fixtures in compliance with these requirements. A person shall not occupy as *owner-occupant* or permit another person to occupy any structure or *premises* that does not comply with the requirements of this chapter.

❖ The owner is responsible for complying with the requirements of this chapter. A structure must not be occupied if the plumbing systems or facilities do not conform to the minimum code requirements.

SECTION 502
REQUIRED FACILITIES

[P] 502.1 Dwelling units. Every *dwelling unit* shall contain its own bathtub or shower, lavatory, water closet and kitchen

INTERNATIONAL CODE COUNCIL®
Copyright © 2018 ICC. ALL RIGHTS RESERVED. Accessed by Jim Davis (JDavis@ShakopeeMN.gov), (City of Shakopee) Order Number #101054067 on Mar 17, 2021 01:42 PM (PDT) pursuant to License Agreement with ICC. No further reproduction, no further reproductions by any third party, or distribution authorized. Single user only, copying and networking prohibited. ANY UNAUTHORIZED REPRODUCTION OR DISTRIBUTION IS A VIOLATION OF THE FEDERAL COPYRIGHT ACT AND THE LICENSE AGREEMENT, AND SUBJECT TO CIVIL AND CRIMINAL PENALTIES THEREUNDER.

101054067

sink that shall be maintained in a sanitary, safe working condition. The lavatory shall be placed in the same room as the water closet or located in close proximity to the door leading directly into the room in which such water closet is located. A kitchen sink shall not be used as a substitute for the required lavatory.

❖ Every dwelling unit is to have at least one water closet, one lavatory, one kitchen-type sink and one bathtub or shower to meet the basic requirements for sanitation and personal hygiene.

The lavatory must be located in the same room as or near the door that leads to the water closet. This requirement makes it convenient for occupants to wash their hands after using the water closet, which is good practice for personal hygiene and greatly reduces the spread of germs and bacteria.

The required kitchen sink is intended to provide separate facilities for food preparation and dishwashing and is not intended for hand cleansing after using the toilet facilities, thus reducing the likelihood of contamination of surfaces that are subject to contact with food.

[P] 502.2 Rooming houses. Not less than one water closet, lavatory and bathtub or shower shall be supplied for each four *rooming units*.

❖ Rooming houses with shared bathroom and toilet facilities must conform to the following minimum number of fixtures: one water closet, one lavatory and one bathtub or shower (i.e., one bathroom group) for each four rooming units, or portion thereof.

For example, a house with 22 rooming units requires at least six bathroom groups of plumbing fixtures (22 ÷ 4 = 5.5; rounded up to 6).

[P] 502.3 Hotels. Where private water closets, lavatories and baths are not provided, one water closet, one lavatory and one bathtub or shower having access from a public hallway shall be provided for each 10 *occupants*.

❖ Hotels with guestrooms that share bathroom and toilet facilities must conform to the following minimum number of fixtures: one water closet, one lavatory and one bathtub or shower for each 10 occupants, or portion thereof.

For example, a hotel with 22 occupants requires a minimum of three water closets, three lavatories and three bathtubs or showers, or a combination of three bathtubs and showers (22 ÷ 10 = 2.2; rounded up to 3).

[P] 502.4 Employees' facilities. Not less than one water closet, one lavatory and one drinking facility shall be available to employees.

❖ To provide employees with sufficient sanitary facilities, every place of employment is to have at least one water closet, one lavatory and one drinking facility.

This is a minimum requirement that provides the employees with at least one toilet room for their use. Obviously, the number of employees working for a company will affect the adequacy of providing only one water closet and one hand sink. When economically and physically practical, the code official should encourage a place of employment to install the minimum number of plumbing facilities established in the IPC.

[P] 502.4.1 Drinking facilities. Drinking facilities shall be a drinking fountain, water cooler, bottled water cooler or disposable cups next to a sink or water dispenser. Drinking facilities shall not be located in *toilet rooms* or *bathrooms*.

❖ To reduce the potential of contaminating the water, drinking facilities must be separate from toilet rooms or bathrooms. Water shall be provided by a drinking fountain, water cooler, bottled water cooler or disposable cups located next to a sink or water dispenser.

The requirement for disposable cups should be monitored, as many diseases are transmitted through shared, unwashed or unsanitized eating and drinking utensils.

[P] 502.5 Public toilet facilities. Public toilet facilities shall be maintained in a safe, sanitary and working condition in accordance with the *International Plumbing Code*. Except for periodic maintenance or cleaning, public access and use shall be provided to the toilet facilities at all times during *occupancy* of the *premises*.

❖ The purposes of this section are to establish minimum maintenance provisions for public toilet facilities and to ensure the availability of these facilities to the public at all times the building is occupied.

SECTION 503
TOILET ROOMS

[P] 503.1 Privacy. *Toilet rooms* and *bathrooms* shall provide privacy and shall not constitute the only passageway to a hall or other space, or to the exterior. A door and interior locking device shall be provided for all common or shared *bathrooms* and *toilet rooms* in a multiple dwelling.

❖ To protect human dignity and modesty, all toilet rooms and bathrooms must afford privacy. Where toilet rooms or bathrooms are shared by building occupants in dormitories or boarding houses, there is to be a door with a locking device either for each water closet compartment in a toilet room/bathroom or that controls access to the toilet room/bathroom.

Passage through bathrooms and toilet rooms to get to other rooms, spaces, corridors or the exterior is inconvenient and could also jeopardize the means of egress because of locked doors, wet floors and obstructions.

[P] 503.2 Location. *Toilet rooms* and *bathrooms* serving hotel units, *rooming units* or dormitory units or *housekeeping units*, shall have access by traversing not more than one flight of stairs and shall have access from a common hall or passageway.

❖ Occupants of hotel units, rooming units, dormitory units or housekeeping units should not have to travel beyond the next adjacent story or pass through

INTERNATIONAL CODE COUNCIL®
Copyright © 2018 ICC. ALL RIGHTS RESERVED. Accessed by Jim Davis (JDavis@ShakopeeMN.gov), (City of Shakopee) Order Number #101054067 on Mar 17, 2021 01:42 PM (PDT) pursuant to License Agreement with ICC. No further reproduction, no further reproductions by any third party, or distribution authorized. Single user only, copying and networking prohibited. ANY UNAUTHORIZED REPRODUCTION OR DISTRIBUTION IS A VIOLATION OF THE FEDERAL COPYRIGHT ACT AND THE LICENSE AGREEMENT, AND SUBJECT TO CIVIL AND CRIMINAL PENALTIES THEREUNDER.

101054067

another occupant's unit to gain access to a bathroom or toilet facility. Convenient access to facilities is a basic necessity for their use and maintenance.

[P] 503.3 Location of employee toilet facilities. Toilet facilities shall have access from within the employees' working area. The required toilet facilities shall be located not more than one story above or below the employees' working area and the path of travel to such facilities shall not exceed a distance of 500 feet (152 m). Employee facilities shall either be separate facilities or combined employee and public facilities.

Exception: Facilities that are required for employees in storage structures or kiosks, which are located in adjacent structures under the same ownership, lease or control, shall not exceed a travel distance of 500 feet (152 m) from the employees' regular working area to the facilities.

❖ Employers are required to provide toilet facilities for employees within the employees' regular work areas. Employees should not have to travel more than 500 feet (152 m) or beyond the next adjacent story to reach the toilet room.

Employee toilet facilities can be for employees' use only or they can share customer facilities.

If toilet rooms are inconvenient or located too far from the work area, they create a physical hardship for employees.

This section does not require storage buildings and kiosks to contain toilet facilities, as long as there are toilet facilities in an adjacent building such that the distance from the work area to the toilet facilities does not exceed 500 feet (152 m). The building with the toilet facilities must be under the same ownership, lease or control as the storage area. Employers cannot expect their employees to depend on neighborhood gas stations, stores or other businesses to provide access to toilet facilities.

[P] 503.4 Floor surface. In other than *dwelling units*, every *toilet room* floor shall be maintained to be a smooth, hard, nonabsorbent surface to permit such floor to be easily kept in a clean and sanitary condition.

❖ A toilet room floor is much easier to maintain if the surface is smooth, hard and nonabsorbent. In areas such as toilet rooms where the public is likely to enter a facility, the primary concern remains keeping the floor area as clean as possible to safeguard against the spread of disease.

SECTION 504
PLUMBING SYSTEMS AND FIXTURES

[P] 504.1 General. Plumbing fixtures shall be properly installed and maintained in working order, and shall be kept free from obstructions, leaks and defects and be capable of performing the function for which such plumbing fixtures are designed. Plumbing fixtures shall be maintained in a safe, sanitary and functional condition.

❖ All plumbing fixtures must operate adequately and perform their intended functions. Fixtures must drain quickly without permitting sewer gases to enter the structure. Fixtures are not to leak from either the water supply piping or the waste discharge piping.

Fixtures must not be worn or deteriorated so that they cannot be adequately cleaned. Kitchen sinks and lavatories that have defects that prevent them from being kept clean increase the likelihood that disease-causing organisms can be spread to food sources or from person to person. Fixtures with structural cracks can fail suddenly, possibly causing personal injury and further property damage.

[P] 504.2 Fixture clearances. Plumbing fixtures shall have adequate clearances for usage and cleaning.

❖ Inadequate clearance between fixtures and adjacent surfaces can create confined spaces that allow disease and odor-causing bacteria to multiply. For proper sanitation, the fixture must have sufficient clearances for proper use and cleaning.

Although the code does not specify exact clearances between fixtures and adjacent surfaces, the code official must use good judgment and must review the required clearances for compliance with the IPC.

[P] 504.3 Plumbing system hazards. Where it is found that a plumbing system in a structure constitutes a hazard to the *occupants* or the structure by reason of inadequate service, inadequate venting, cross connection, backsiphonage, improper installation, *deterioration* or damage or for similar reasons, the *code official* shall require the defects to be corrected to eliminate the hazard.

❖ Any plumbing system having a deficiency or condition that is deemed by the code official as hazardous to the occupants or to the structure must be repaired or altered to eliminate the hazard. Hazards in a plumbing system include, but are not limited to, the following:

- Undersized piping.
- Inadequate venting.
- Cross connections.
- Lack of backflow prevention means.
- Lack of sufficient fixtures.
- Improperly installed piping, fixtures or fittings.
- Deteriorated, damaged, worn or otherwise defective piping, fixtures or fittings.
- Inadequately supported fixtures or piping.
- Inadequate water pressure or volume.

One of the most commonly encountered hazards is a submerged outlet in older-style fixtures in water closets, bathtubs, lavatories, laundry tubs and water softeners. Cross connections and improperly protected outlets greatly increase the likelihood that contaminated water will be introduced into the potable water supply.

INTERNATIONAL CODE COUNCIL®
Copyright © 2018 ICC. ALL RIGHTS RESERVED. Accessed by Jim Davis (JDavis@ShakopeeMN.gov), (City of Shakopee) Order Number #101054067 on Mar 17, 2021 01:42 PM (PDT) pursuant to License Agreement with ICC. No further reproduction, no further reproductions by any third party, or distribution authorized. Single user only, copying and networking prohibited. ANY UNAUTHORIZED REPRODUCTION OR DISTRIBUTION IS A VIOLATION OF THE FEDERAL COPYRIGHT ACT AND THE LICENSE AGREEMENT, AND SUBJECT TO CIVIL AND CRIMINAL PENALTIES THEREUNDER.

101054067

SECTION 505
WATER SYSTEM

[P] 505.1 General. Every sink, lavatory, bathtub or shower, drinking fountain, water closet or other plumbing fixture shall be properly connected to either a public water system or to an *approved* private water system. Kitchen sinks, lavatories, laundry facilities, bathtubs and showers shall be supplied with hot or tempered and cold running water in accordance with the *International Plumbing Code*.

❖ The water for all plumbing fixtures must be properly connected to either a public or an approved private water system. If there is any question about the quality of the private water source, the code official should require that the water be tested and approved by either a private testing service or a local health department. A plumbing system cannot be considered adequate if the water entering the system is contaminated or otherwise unfit for human consumption and use.

The desired qualities for safe water are:

- Free of pathogenic organisms.
- Free of toxic chemicals.
- Free of odor, taste, color and turbidity.
- Free of excessive minerals.
- Relatively noncorrosive.
- Adequate in quantity and pressure.

All sinks, lavatories, bathtubs and showers must be supplied with cold and hot or tempered running water as regulated by the IPC. Heated water is a basic necessity for all cleansing and bathing needs. It should be noted that the IPC only allows tempered water [water that is 85°F (29°C) to 110°F (43°C)] to be used for bathing and washing in nonresidential occupancies. The IPC requires tempered water to be supplied to hand-washing fixtures located in public toilet facilities.

[P] 505.2 Contamination. The water supply shall be maintained free from contamination, and all water inlets for plumbing fixtures shall be located above the flood-level rim of the fixture. Shampoo basin faucets, janitor sink faucets and other hose bibs or faucets to which hoses are attached and left in place, shall be protected by an approved atmospheric-type vacuum breaker or an approved permanently attached hose connection vacuum breaker.

❖ Cross connections and unprotected outlets are the most common sources of contamination in potable water systems. The IPC defines a cross connection as any physical connection or arrangement between two otherwise separate piping systems—one of which contains potable water and the other water of either unknown or questionable safety, steam, gas or chemical—whereby there exists the possibility for flow from one system to the other, with the direction of flow depending on the pressure differential between the two systems.

The code official might not always be able to discover all cross connections and unprotected outlets in a building, but should become familiar with the locations where such usually occur. Many older-style plumbing fixtures were designed or installed with built-in submerged water supply outlets. A few of the more common fixtures and appliances that might have unprotected outlets include: water closets, bathtubs, lavatories, laundry tubs and hose bibbs (sill cocks). Water softener drains are often improperly connected to the drainage system, thereby creating cross connections [see Commentary Figure 505.2(1)].

There are two basic methods of preventing contamination of the potable water supply. The first is to provide an air gap between the water outlet and the flood level rim of the fixture. The second is to install backflow prevention devices in the water supply line.

An air gap is the ideal solution because it does not rely on the performance of mechanical devices to prevent backflow into the water supply. Typically, an air gap must be twice the diameter of the supply pipe to the fixture, but never less than 1 inch (25 mm) above the flood level rim. The requirements for air gap protection of fixtures are found in Table 608.15.1 of the IPC.

An example of an unprotected outlet is identified in Commentary Figure 505.2(2) when the following conditions exist:

- The third-floor water closet has the ball cock (fill valve) submerged in the water of the water closet tank.
- The water pressure within the building is low because of corrosion buildup in the water pipes or simultaneous usage of fixtures.
- The third-floor water closet is flushed, thereby opening the ball cock.
- Contaminated water can be drawn from the water closet tank into the supply pipes.

In such circumstances when the sink is filling, the pressure can be reduced to less than atmospheric at the water closet fill valve. This creates a siphon action in the water closet tank. A potentially hazardous event has occurred that could introduce contaminated water into the potable water supply.

The solution to this problem is fairly simple. The water closet fill valve (ball cock) needs to be replaced with an antisiphon fill valve that extends a minimum of 1 inch (25 mm) above the overflow tube in the water closet tank. Additionally, the water pressure throughout the building should be increased by replacing or upsizing the water supply piping.

Another common backflow hazard can result from hoses being attached to threaded outlets. Backflow can occur when the open end of the hose is submerged in any liquid. For example, the possibility of backflow exists when a homeowner uses a hose to spread chemical fertilizers, herbicides or insecticides. If negative pressure should occur in the water supply piping, the water and chemicals from the hose could be siphoned into the water supply.

INTERNATIONAL CODE COUNCIL®
Copyright © 2018 ICC. ALL RIGHTS RESERVED. Accessed by Jim Davis (JDavis@ShakopeeMN.gov), (City of Shakopee) Order Number #101054067 on Mar 17, 2021 01:42 PM (PDT) pursuant to License Agreement with ICC. No further reproduction, no further reproductions by any third party, or distribution authorized. Single user only, copying and networking prohibited. ANY UNAUTHORIZED REPRODUCTION OR DISTRIBUTION IS A VIOLATION OF THE FEDERAL COPYRIGHT ACT AND THE LICENSE AGREEMENT, AND SUBJECT TO CIVIL AND CRIMINAL PENALTIES THEREUNDER.

101054067

The solution to this problem is to install a hose-connection-type vacuum breaker on the water supply outlet fitting. When a negative pressure occurs in the water supply, the vacuum breaker opens to the atmosphere allowing air to enter the piping system, thus "breaking" the vacuum.

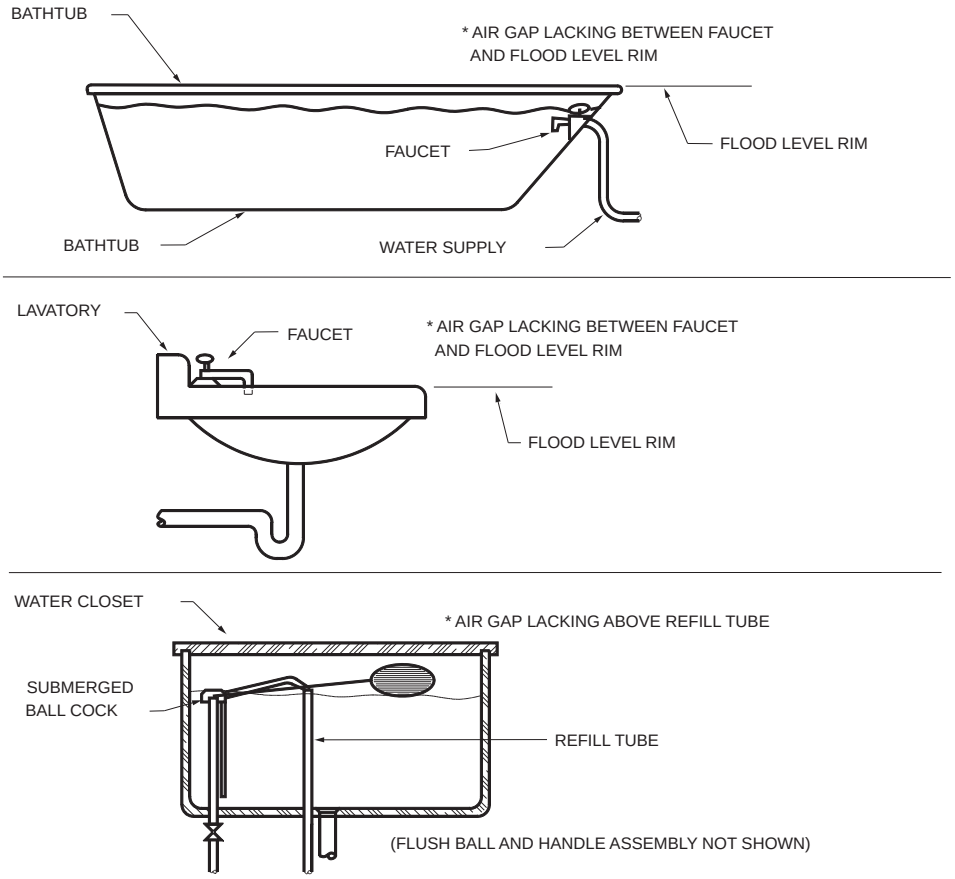

Commentary Figure 505.2(1)
COMMON CROSS CONNECTIONS

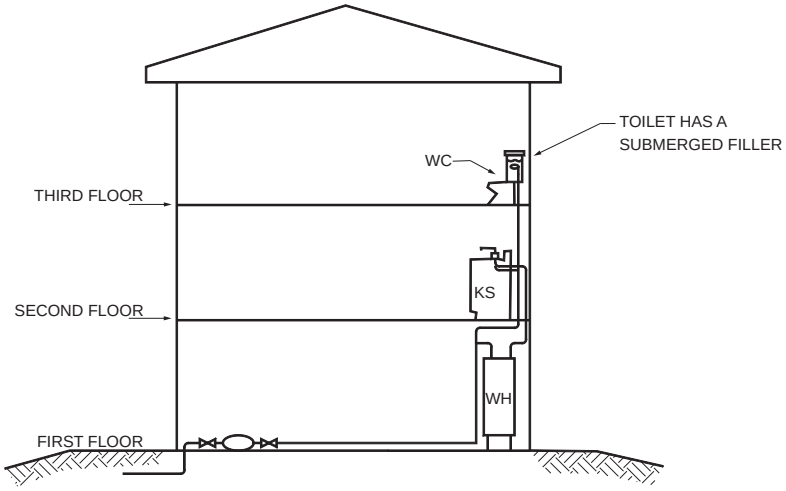

Commentary Figure 505.2(2)
WATER SUPPLY PROTECTION

INTERNATIONAL CODE COUNCIL®
Copyright © 2018 ICC. ALL RIGHTS RESERVED. Accessed by Jim Davis (JDavis@ShakopeeMN.gov), (City of Shakopee) Order Number #101054067 on Mar 17, 2021 01:42 PM (PDT) pursuant to License Agreement with ICC. No further reproduction, no further reproductions by any third party, or distribution authorized. Single user only, copying and networking prohibited. ANY UNAUTHORIZED REPRODUCTION OR DISTRIBUTION IS A VIOLATION OF THE FEDERAL COPYRIGHT ACT AND THE LICENSE AGREEMENT, AND SUBJECT TO CIVIL AND CRIMINAL PENALTIES THEREUNDER.

101054067

A type of cross connection occurs when a water supply is connected directly to an appliance or a piece of equipment. Some examples are water supplies to hot water and steam boilers, lawn irrigation systems, fire suppression systems, carbonated beverage machines and equipment used for various industrial applications, such as manufacturing. These items are typically not able to function with an air gap between the supply pipe and the appliance or fixture. Consequently, some type of backflow preventer device must be installed in the water supply line to prevent the water flow from reversing direction. Common types of protection are pressure-type vacuum breakers, barometric loops and reduced pressure principle backflow preventers.

Any time there is not an obvious air gap or visible backflow preventer device in a water supply line, the code official should attempt to determine if a hazard exists.

Cross connections between a private water supply (typically a well system) and a potable public water supply are not permitted under any circumstance. If the ground water becomes contaminated, a cross connection could affect the entire public water supply system.

The code official should work with local plumbing inspectors or water departments to identify and eliminate all cross connections and unprotected potable water outlets.

[P] 505.3 Supply. The water supply system shall be installed and maintained to provide a supply of water to plumbing fixtures, devices and appurtenances in sufficient volume and at pressures adequate to enable the fixtures to function properly, safely, and free from defects and leaks.

❖ Inadequate water pressure or insufficient volume can cause plumbing fixtures, washing machines, dishwashers and other appliances to operate improperly. Inadequate water pressure can restrict the flow of water into bathtubs, showers and sinks to the point that the fixtures are not usable. The code requires enough pressure and volume so that all fixtures and appliances are functional and free of undue hazards.

There are many causes of inadequate water pressure and lack of sufficient volume. A few of the common causes include:

- Private wells.
- Inadequate ground-water supply.
- Defective pump or a pump that has lost its prime.
- Storage tank that has lost its air cushion.
- Sand or silt plugging the well point.

Municipal systems:

- Inadequate pressure in the public water main.
- Sudden loss of pressure in an area caused by the use of a nearby fire hydrant, a broken main water line, etc.

Quite frequently, an inadequate water supply is the result of problems within a building. A few examples include clogged or corroded pipes, undersized piping, crimped or bent pipes and a system that is inadequately designed. A change in occupancy of a building might create demands that exceed the original water piping capacity.

[P] 505.4 Water heating facilities. Water heating facilities shall be properly installed, maintained and capable of providing an adequate amount of water to be drawn at every required sink, lavatory, bathtub, shower and laundry facility at a temperature not less than 110°F (43°C). A gas-burning water heater shall not be located in any *bathroom*, *toilet room*, *bedroom* or other occupied room normally kept closed, unless adequate combustion air is provided. An *approved* combination temperature and pressure-relief valve and relief valve discharge pipe shall be properly installed and maintained on water heaters.

❖ A water heater can be dangerous if it is not properly installed and maintained. A water heater is a closed vessel that can be subjected to high temperature and pressure. Under the right conditions, a water heater can explode violently and cause extensive structural damage to buildings and personal injury or death. As such, water heaters should be thoroughly inspected. The following is a guide for the inspection of water heater systems.

1. Electric water heaters:
   - Is the electric service for the house adequate to supply the normal demands of the house as well as the increased demands of a water heater?
   - Is the electric wiring for the water heater of adequate size and properly installed in accordance with the electrical code?
   - Are all conductors properly installed and protected against physical damage?
2. Fuel-burning water heaters:
   - Which fuel is being used? Commonly used fuels include natural gas, propane gas and fuel oil.
   - Is the fuel piping constructed from approved materials, properly connected and adequately supported?
   - Is there a readily accessible, properly installed shutoff valve to stop the fuel supply?
3. Safety controls (electric and fuel-burning):
   - Do the safety controls and devices appear to be in good condition without evidence of tampering or modification?
   - Is the thermostat (temperature control) operational and in good condition?
   - Does the water heater have a temperature and a pressure relief valve or a combina-

INTERNATIONAL CODE COUNCIL®
Copyright © 2018 ICC. ALL RIGHTS RESERVED. Accessed by Jim Davis (JDavis@ShakopeeMN.gov), (City of Shakopee) Order Number #101054067 on Mar 17, 2021 01:42 PM (PDT) pursuant to License Agreement with ICC. No further reproduction, no further reproductions by any third party, or distribution authorized. Single user only, copying and networking prohibited. ANY UNAUTHORIZED REPRODUCTION OR DISTRIBUTION IS A VIOLATION OF THE FEDERAL COPYRIGHT ACT AND THE LICENSE AGREEMENT, AND SUBJECT TO CIVIL AND CRIMINAL PENALTIES THEREUNDER.

101054067

tion temperature and pressure relief valve? These safety valves are necessary to relieve excessive pressures, thereby preventing an explosion of the water heater. The temperature and pressure relief valves or combination temperature and pressure relief valve must be rated for a pressure not higher than the working pressure rating of the water heater, and in no case higher than 150 pounds per square inch (psi) (1034 kPa).

- Is the temperature relief valve sensing element located in the top 6 inches (152 mm) of the water heater tank? This is the hottest water in the tank.
- Is the relief valve in good condition and free of corrosion or leakage?
- Is the relief valve rating equal to or greater than the British thermal unit per hour (Btu/h) input rating of the water heater? An undersized safety relief valve does not offer adequate protection.
- Does the relief valve have a discharge pipe to divert heated water toward the floor and to a point where it will not cause damage to the structure? The discharge pipe must be rigid piping of the same diameter as the relief valve outlet. The lower end of the discharge pipe must not be closed or plugged and is not to have a threaded end that would invite closure. The relief valve discharge pipe must not be located where it would be subject to freezing, as this could result in a complete blockage of the pipe.

4. Venting:
    - Do all fuel-burning water heaters vent the combustion products to an approved chimney or venting system?
    - Does the vent have adequate clearance from combustible materials (wood, paper, cloth, etc.)?
    - Are the vent or chimney connectors constructed of approved materials? They should be constructed from corrosion-resistant materials such as aluminum, galvanized steel and stainless steel. The joints should be fastened with sheet metal screws, rivets or other approved means.
    - Does the chimney, vent or connector show signs of deterioration, corrosion or condensation?
    - Is the vent/chimney connector properly supported and connected to the vent or chimney?

If there is a doubt or question about a particular installation (see Commentary Figure 505.4), plumbing inspectors or water department officials should be consulted.

Fuel-burning water heaters must not be installed in bathrooms, toilet rooms, bedrooms or any other rooms that are normally kept closed when in use, unless combustion air is brought directly to the appliance from outside of the room. Adequate combustion air must always be provided regardless of the appliance location. The *International Mechanical Code*® (IMC®) prohibits the installation of fuel-fired water heaters in such rooms in all cases, except where the water heater is a direct-vent type or is placed in a

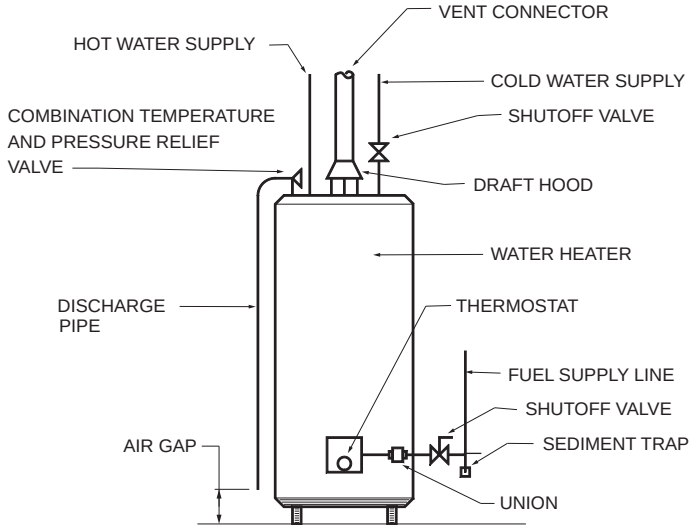

Commentary Figure 505.4
WATER HEATER INSTALLATION REQUIREMENTS

INTERNATIONAL CODE COUNCIL®
Copyright © 2018 ICC. ALL RIGHTS RESERVED. Accessed by Jim Davis (JDavis@ShakopeeMN.gov), (City of Shakopee) Order Number #101054067 on Mar 17, 2021 01:42 PM (PDT) pursuant to License Agreement with ICC. No further reproduction, no further reproductions by any third party, or distribution authorized. Single user only, copying and networking prohibited. ANY UNAUTHORIZED REPRODUCTION OR DISTRIBUTION IS A VIOLATION OF THE FEDERAL COPYRIGHT ACT AND THE LICENSE AGREEMENT, AND SUBJECT TO CIVIL AND CRIMINAL PENALTIES THEREUNDER.

101054067

dedicated enclosure completely isolated from the occupied room. Asphyxiation of the room occupants could possibly result from inadequate combustion air, venting system failure or appliance malfunction (see Section 603.2).

The code official must also be sure that the water heater is able to provide water of at least 110°F (43°C) to every fixture requiring hot water (see Section 505.1).

Temperature and pressure relief valves are absolutely necessary to prevent the possibility of water heater explosion resulting from overheating.

[P] 505.5 Nonpotable water reuse systems. Nonpotable water reuse systems and rainwater collection and conveyance systems shall be maintained in a safe and sanitary condition. Where such systems are not properly maintained, the systems shall be repaired to provide for safe and sanitary conditions, or the system shall be abandoned in accordance with Section 505.5.1.

❖ Requirements for the design, construction and installation of water reuse systems are contained in Chapter 13 of the IPC. Nonpotable water reuse systems do require maintenance and must be kept in good repair to provide water for the intended fixtures or other uses. However, there will be times that abandonment of some systems will be necessary. Section 505.1 contains requirements for abandonment of these systems.

[P] 505.5.1 Abandonment of systems. Where a nonpotable water reuse system or a rainwater collection and distribution system is not maintained or the owner ceases use of the system, the system shall be abandoned in accordance with Section 1301.10 of the *International Plumbing Code*.

❖ Section 1301.10 of the IPC contains prescriptive requirements to properly abandon a nonpotable water reuse system, including requirements for the system piping and storage tank(s).

SECTION 506
SANITARY DRAINAGE SYSTEM

[P] 506.1 General. Plumbing fixtures shall be properly connected to either a public sewer system or to an *approved* private sewage disposal system.

❖ Plumbing fixtures must be connected to an approved public or private sewer system. Private systems that should not be approved would include pit privies, cesspools or any system that discharges to storm drains, ponds, lakes, streams or rivers.

[P] 506.2 Maintenance. Every plumbing stack, vent, waste and sewer line shall function properly and be kept free from obstructions, leaks and defects.

❖ All waste, soil, sewer and vent piping must be installed and maintained so as to function properly. Obstructions or defects that present health hazards must be corrected. Leaking pipes or joints must be replaced or repaired. All repairs and new installations must be in accordance with the IPC.

A thorough and accurate inspection of the plumbing system requires knowledge of plumbing systems; however, with training and experience, the code official can identify typical problems and improper installations. In broad terms, he or she should inspect the following elements of a plumbing system: fixtures; sanitary drainage systems; vents and venting; traps; drainage cleanouts; and hangers and supports.

1. Sanitary drainage system: The system must be free of leaks. Leaking drain pipes can cause structural damage and spread illness from the pathogenic organisms in the waste water.

   The code official should inspect all visible drainpipes for any improper connections or installations. A few frequently encountered problems include the following:

   a. Improperly installed materials: Materials not designed or approved for plumbing applications are often used for repairs and modifications in plumbing systems. The improper use of fittings, joining means and connectors is common in existing structures. Drainage piping with no slope or reverse slope can promote blockages.

   b. Joints and pipes that have been “patched” with tape, putty, caulking or tar thus indicating past or current leakage in the drainage system.

   c. Unworkmanlike installation: This often indicates that an untrained handyman has made repairs.

      The code official should check the entire system for any indications of unvented fixtures, improper materials or other typical violations. Additionally, it should be determined whether permits were obtained to install the work.

2. Vents and venting: Plumbing systems are designed with an integral venting system to prevent loss of the water seals in fixture traps. Fixture vents must be provided and maintained where necessary to protect traps from pressure fluctuations and siphon action that cause loss of the water seal.

3. Traps: Each plumbing fixture must have a trap at the connection to the sanitary drainage system. A trap creates a water seal that prevents sewer gas from entering the structure. Sewer gases can be toxic and carry bacteria-laden aerosols. Some types of sewer gases are even explosive.

4. Hangers and supports: Improperly or inadequately supported waste and vent piping frequently indicates a nonprofessional installation.

INTERNATIONAL CODE COUNCIL®
Copyright © 2018 ICC. ALL RIGHTS RESERVED. Accessed by Jim Davis (JDavis@ShakopeeMN.gov), (City of Shakopee) Order Number #101054067 on Mar 17, 2021 01:42 PM (PDT) pursuant to License Agreement with ICC. No further reproduction, no further reproductions by any third party, or distribution authorized. Single user only, copying and networking prohibited. ANY UNAUTHORIZED REPRODUCTION OR DISTRIBUTION IS A VIOLATION OF THE FEDERAL COPYRIGHT ACT AND THE LICENSE AGREEMENT, AND SUBJECT TO CIVIL AND CRIMINAL PENALTIES THEREUNDER.

101054067

All piping is required to be adequately supported to maintain pitch and alignment and prevent strain on connections and joints.

In general, the code official should inspect the entire visible plumbing system for: leakage; the presence of fixture, standpipe and floor drain traps; approved materials (with approved connections) and an acceptable venting system.

[P] 506.3 Grease interceptors. Grease interceptors and automatic grease removal devices shall be maintained in accordance with this code and the manufacturer's installation instructions. Grease interceptors and automatic grease removal devices shall be regularly serviced and cleaned to prevent the discharge of oil, grease, and other substances harmful or hazardous to the building drainage system, the public sewer, the private sewage disposal system or the sewage treatment plant or processes. Records of maintenance, cleaning and repairs shall be available for inspection by the *code official*.

❖ This section clarifies that grease interceptors and automatic grease removal devices require ongoing, routine maintenance in order to perform their intended functions. Any such maintenance should be in accordance with the manufacturer's maintenance criteria. The language is coordinated with the provisions of Section 1003.1 of the IPC, which establishes when these devices are required to be installed. Failure to maintain these devices results in public health risks via sanitary sewer overflows into buildings, roads and streams and premature deterioration and failure of public and private sewage systems.

SECTION 507
STORM DRAINAGE

[P] 507.1 General. Drainage of roofs and paved areas, *yards* and courts, and other open areas on the *premises* shall not be discharged in a manner that creates a public nuisance.

❖ Storm water must be discharged so that it does not pond in paved areas, yards, courts or open areas. Standing water can freeze in cold climates, thereby causing a slip hazard. In warm weather, standing water can create an insect breeding ground.

Roof gutters and downspouts are not required, provided that storm water is discharged in such a manner that it does not create a public nuisance.

The code official should also check local ordinances to determine if run-off storm drainage water and sump pumps can be allowed to enter the sanitary sewer system. Most communities require all storm drainage water to be separated from the sanitary sewer system. Disconnecting the storm water from the sanitary sewer system can reduce the costs of sewage treatment and eliminate an overload of the treatment facility.

The emphasis in storm drainage is to remove the water quickly without creating hazards to pedestrians or causing damage to any structures on the same or neighboring property.

Bibliography

The following resource materials were used in the preparation of the commentary for this chapter of the code:

IFGC—2018, *International Fuel Gas Code*. Washington, DC: International Code Council, 2017.

IMC—2018, *International Mechanical Code*. Washington, DC: International Code Council, 2017.

IPC—2018, *International Plumbing Code*. Washington, DC: International Code Council, 2017.

INTERNATIONAL CODE COUNCIL®

Copyright © 2018 ICC. ALL RIGHTS RESERVED. Accessed by Jim Davis (JDavis@ShakopeeMN.gov), (City of Shakopee) Order Number #101054067 on Mar 17, 2021 01:42 PM (PDT) pursuant to License Agreement with ICC. No further reproduction, no further reproductions by any third party, or distribution authorized. Single user only, copying and networking prohibited. ANY UNAUTHORIZED REPRODUCTION OR DISTRIBUTION IS A VIOLATION OF THE FEDERAL COPYRIGHT ACT AND THE LICENSE AGREEMENT, AND SUBJECT TO CIVIL AND CRIMINAL PENALTIES THEREUNDER.

101054067

Chapter 6: Mechanical and Electrical Requirements

General Comments

Chapter 6 establishes minimum criteria for the installation and maintenance of the following: heating and air-conditioning equipment, appliances and systems; water-heating equipment, appliances and systems; cooking equipment and appliances; ventilation and exhaust equipment; gas and liquid fuel distribution piping and components; fireplaces and solid fuel-burning appliances; chimneys and vents; electrical services; lighting fixtures; electrical receptacle outlets; electrical distribution system equipment, devices and wiring; and elevators, escalators and dumbwaiters.

The primary objectives of mechanical and heating equipment inspections are to detect, identify and abate any condition that is a potential fire or explosion hazard; is a potential cause of asphyxiation or carbon monoxide poisoning; poses the risk of physical injury to an occupant; prevents the equipment from adequately performing its intended function; or otherwise endangers the occupants or the structure.

The primary objectives of electrical equipment and system inspections are to detect, identify and abate any condition that is a potential fire hazard or electrical shock hazard. Any condition that inadequately provides for the supply and distribution of electrical power throughout the structure must also be detected, identified and abated.

All mechanical and electrical facilities must be capable of providing the minimum levels of safety, illumination, comfort, utility and convenience as prescribed in this chapter.

Purpose

All mechanical and electrical equipment, appliances and systems must be properly installed to serve the intended purpose. Proper installation, however, does not in itself guarantee safety or performance. In addition to proper installation, all such equipment, appliances and systems must be maintained, as they are subject to deterioration, wear and aging, and may require cleaning, lubrication, adjustment, etc. All materials and components used to construct mechanical and electrical systems have a limited life span, and require repair or replacement at various time intervals that are specific to the material or component.

The purpose of Chapter 6 is to establish minimum performance requirements for electrical and mechanical facilities and to establish minimum standards for the safety of such facilities.

SECTION 601 GENERAL

601.1 Scope. The provisions of this chapter shall govern the minimum mechanical and electrical facilities and equipment to be provided.

❖ Minimum performance guidelines for mechanical and electrical facilities and equipment are established in this chapter. Installations that do not conform to these minimum criteria are unacceptable.

601.2 Responsibility. The *owner* of the structure shall provide and maintain mechanical and electrical facilities and equipment in compliance with these requirements. A person shall not occupy as *owner-occupant* or permit another person to occupy any *premises* that does not comply with the requirements of this chapter.

❖ It is the responsibility of the owner of the structure to provide and maintain the required electrical and mechanical facilities. An owner must not occupy or allow any other person to occupy a structure that is not in compliance with this chapter; thus, the requirements of this chapter are the minimum necessary to make a structure occupiable.

SECTION 602 HEATING FACILITIES

602.1 Facilities required. Heating facilities shall be provided in structures as required by this section.

❖ This section establishes the scope of requirements in Section 602 [see the *International Mechanical Code*® (IMC®) for space-heating requirements for new structures].

602.2 Residential occupancies. Dwellings shall be provided with heating facilities capable of maintaining a room temperature of 68°F (20°C) in all habitable rooms, *bathrooms* and *toilet rooms* based on the winter outdoor design temperature for the locality indicated in Appendix D of the *International Plumbing Code*. Cooking appliances shall not be used, nor shall portable unvented fuel-burning space heaters be used, as a means to provide required heating.

Exception: In areas where the average monthly temperature is above 30°F (-1°C), a minimum temperature of 65°F (18°C) shall be maintained.

❖ This section establishes the following minimum requirements for space heating in residential structures.

INTERNATIONAL CODE COUNCIL®
Copyright © 2018 ICC. ALL RIGHTS RESERVED. Accessed by Jim Davis (JDavis@ShakopeeMN.gov), (City of Shakopee) Order Number #101054067 on Mar 17, 2021 01:42 PM (PDT) pursuant to License Agreement with ICC. No further reproduction, no further reproductions by any third party, or distribution authorized. Single user only, copying and networking prohibited. ANY UNAUTHORIZED REPRODUCTION OR DISTRIBUTION IS A VIOLATION OF THE FEDERAL COPYRIGHT ACT AND THE LICENSE AGREEMENT, AND SUBJECT TO CIVIL AND CRIMINAL PENALTIES THEREUNDER.

101054067

Adequate heat is required for human health and comfort. The elderly, infirm and very young are most susceptible to illness and death from inadequate space heating.

Heating equipment must be provided and maintained by the owner and must be able to heat all habitable rooms, bathrooms and toilet rooms to at least 68°F (20°C) based on the outside design temperature established for each locality adopting the code. This 68°F (20°C) standard is believed to be the minimum indoor temperature at which people can be reasonably comfortable and can maintain healthy living. This is intended as an absolute minimum since most dwelling occupants will seek indoor temperatures 5°F to 10°F (-15°C to -12°C) higher than this.

The outdoor design temperatures are listed in Appendix D of the *International Plumbing Code*® (IPC®). Outdoor design temperatures provide a baseline from which heat load calculations are made. Heating system capacity is dependent on the predicted outdoor temperatures during the heating season. As the outdoor temperature falls, the heat input to a building must increase to offset the increasing heat losses through the building envelope. Heating systems are designed to have the capacity to maintain the desired indoor temperature when the outdoor temperature is at or above the outdoor design temperature. When the outdoor temperatures are below the outdoor design temperature, the heating system will not be able to maintain a desired indoor temperature. It would be impractical, for example, to design a heating system based on the assumption that someday it might be -20°F (-29°C) outdoors if the outdoor temperature in that region rarely, if ever, dropped that low. In such a case, the heating system would be oversized and, thereby, less efficient and economical.

The winter outdoor design temperature is defined as follows: For 97.5 percent of the total hours in the northern hemisphere heating season, from December through February, the predicted outdoor temperatures will be at or above the values given in Appendix D of the IPC. It would be unreasonable to expect any heating system to maintain a desired indoor temperature when the outdoor temperature is below the design temperature. When the 97.5 percent column in Appendix D of the IPC is used, it can be assumed that the actual outdoor temperature will be at or below the design temperature for roughly 54 hours of the total of 2,160 hours in the months of December through February ($2^1/_2$% of 2,160 = 2,160 hours × 0.025 = 54).

The lack of adequate space-heating systems can result in the misuse of cooking appliances. It is not uncommon for occupants to use fuel-fired ovens and cooktop burners to supply space heating when the minimum required indoor temperature cannot be maintained, and unfortunately, the typical occupant is not aware of the danger in doing so. Fuel-fired cooking appliances in almost all occupancies are unvented and, therefore, discharge all products of combustion directly to the occupied space. Prolonged use of such appliances can produce dangerously high levels of carbon monoxide and other contaminants, especially considering that the occupants will not be opening windows or operating exhaust systems in an effort to conserve heat.

Also, cooking appliances are not designed for the purpose of space heating, and like all appliances, could be dangerous if used in any way other than intended by the manufacturer. Cooking appliances are not designed for continuous or unattended use, and open flames, heat radiation and high surface temperatures pose a significant fire hazard when the appliance is misused.

This section also prohibits the use of fuel-burning, unvented space heaters as a means to provide any portion of the heating that is required for residential occupancies. Similar to cooking appliances, fuel-burning, portable unvented space heaters can be dangerous, especially when used as one of the essential means of providing the required heat. Occupants are likely to locate portable space heaters in rooms where they should not be and also locate such heaters too close to combustible materials and furnishings.

The exception recognizes that in warmer portions of the country, where the average monthly temperature meets or exceeds 30°F (1°C), the minimum inside temperature can be 65°F (18°C). As a result of this code requirement, the occupants are ensured of having a comfortable interior environment.

602.3 Heat supply. Every *owner* and *operator* of any building who rents, leases or lets one or more *dwelling units* or *sleeping units* on terms, either expressed or implied, to furnish heat to the *occupants* thereof shall supply heat during the period from **[DATE]** to **[DATE]** to maintain a minimum temperature of 68°F (20°C) in all habitable rooms, *bathrooms* and *toilet rooms*.

Exceptions:

1. When the outdoor temperature is below the winter outdoor design temperature for the locality, maintenance of the minimum room temperature shall not be required provided that the heating system is operating at its full design capacity. The winter outdoor design temperature for the locality shall be as indicated in Appendix D of the *International Plumbing Code*.
2. In areas where the average monthly temperature is above 30°F (-1°C), a minimum temperature of 65°F (18°C) shall be maintained.

❖ The owner or operator of a rental residential property who agrees to provide heat by express agreement or implication must provide it to all habitable rooms, bathrooms and toilet rooms. The heat supply must be capable of maintaining a temperature of at least 68°F (20°C), 24 hours per day. The occupants could set the temperature in the space under their control at a lower temperature if desired, but 68°F (20°C) must be

INTERNATIONAL CODE COUNCIL®
Copyright © 2018 ICC. ALL RIGHTS RESERVED. Accessed by Jim Davis (JDavis@ShakopeeMN.gov), (City of Shakopee) Order Number #101054067 on Mar 17, 2021 01:42 PM (PDT) pursuant to License Agreement with ICC. No further reproduction, no further reproductions by any third party, or distribution authorized. Single user only, copying and networking prohibited. ANY UNAUTHORIZED REPRODUCTION OR DISTRIBUTION IS A VIOLATION OF THE FEDERAL COPYRIGHT ACT AND THE LICENSE AGREEMENT, AND SUBJECT TO CIVIL AND CRIMINAL PENALTIES THEREUNDER.

101054067

attainable. Based on local climatic conditions, each community needs to establish the period of the year during which heating equipment must be in operation in order to maintain the required temperatures. This section is intended to protect tenants from being subjected to uncomfortable and unhealthy conditions created by undersized, malfunctioning, defective or otherwise inadequate space-heating systems. Having adequate space heating also helps eliminate the need for auxiliary room/space heaters, as well as the unsafe use of cooking appliances for space heating (see Section 602.2). When tenants are forced to use room/space heaters, the risk of fire and asphyxiation increases because of improper use, contact with or close proximity to combustible materials; overloaded wiring and extension cords; lack of ventilation and the user's typical lack of understanding of the potential hazards.

Exception 1 recognizes the limitations of all heating systems that operate when the outdoor temperature is below the design temperature. This exception states that the minimum indoor temperature requirement of 68°F (20°C) does not apply when the outdoor temperature is below the design temperature for the heating system. The exception addresses only the circumstance where the heating system cannot keep up because the outdoor conditions exceed that for which it was designed (see Section 602.2). The exception applies only to heating systems that are operating at their full design capacity (heat output). It does not apply to improperly designed systems, undersized systems or any system operating at less than its full output for whatever reason. On those rare days when the outdoor temperature is lower than what the heating system was designed to handle, it is anticipated that the indoor temperature might not be attainable. Heating systems that were sized based on outdoor temperatures above the actual outdoor design temperature for the locality in which they are installed are improperly designed, and as such, do not comply with the intent of the exception (see commentary, Section 602.2).

Exception 2 is the same as the exception to Section 602.2.

602.4 Occupiable work spaces. Indoor occupiable work spaces shall be supplied with heat during the period from **[DATE]** to **[DATE]** to maintain a minimum temperature of 65°F (18°C) during the period the spaces are occupied.

Exceptions:

1. Processing, storage and operation areas that require cooling or special temperature conditions.
2. Areas in which persons are primarily engaged in vigorous physical activities.

❖ Mercantile, business, factory and similar occupancies in which people are employed must be kept at a temperature of at least 65°F (18°C) during the hours that employees are working. People cannot be expected to work productively and remain in good health if their workplace is uncomfortable. The 65°F (18°C) minimum is lower than required for residential occupancies and is intended to apply to the typical workplace having sedentary employee activities.

Exception 1 recognizes that some occupancies have operations and processes that require temperatures lower than 65°F (18°C), including meat-packing plants, canneries and manufacturing facilities.

Exception 2 recognizes that a minimum temperature of 65°F (18°C) is not necessary where employees are engaged in physical activities such as construction, fabrication and loading in factories.

The period of the year during which structures must comply with this section is to be established by each locality based on local climatic conditions.

602.5 Room temperature measurement. The required room temperatures shall be measured 3 feet (914 mm) above the floor near the center of the room and 2 feet (610 mm) inward from the center of each exterior wall.

❖ To determine compliance with Section 602, temperature measurements are required to be taken at multiple locations. For example, in a room with two exterior walls, a total of three measurements is required. The room temperature requirements of Section 602 must be met in all of the measurement locations. The intent is to make sure that the required temperature will be uniformly reached throughout the occupiable portions of the room or space. The coldest part of a room during the heating season will typically be at the floor level by an outside wall. The measurements are taken at points that are expected to be occupied and that do not reflect the potential temperature extremes in a space (see Commentary Figure 602.5).

Any space that cannot maintain the minimum indoor temperatures as established in Section 602 when the outdoor temperature is at or above the design temperature for the locality should be posted as unfit for human occupancy until enough heat can be supplied.

SECTION 603
MECHANICAL EQUIPMENT

603.1 Mechanical equipment and appliances. Mechanical equipment, appliances, fireplaces, solid fuel-burning appliances, cooking appliances and water heating appliances shall be properly installed and maintained in a safe working condition, and shall be capable of performing the intended function.

❖ Because appliances, mechanical equipment and fireplaces are subject to aging, wear and deterioration, periodic inspection and servicing is required to maintain performance and to verify continued safe operation. Fireplaces and solid fuel-burning appliances must be properly installed, inspected and maintained. They require frequent inspection and maintenance because of the extreme temperatures and corrosive flue gases to which they are subjected. Routine

INTERNATIONAL CODE COUNCIL®
Copyright © 2018 ICC. ALL RIGHTS RESERVED. Accessed by Jim Davis (JDavis@ShakopeeMN.gov), (City of Shakopee) Order Number #101054067 on Mar 17, 2021 01:42 PM (PDT) pursuant to License Agreement with ICC. No further reproduction, no further reproductions by any third party, or distribution authorized. Single user only, copying and networking prohibited. ANY UNAUTHORIZED REPRODUCTION OR DISTRIBUTION IS A VIOLATION OF THE FEDERAL COPYRIGHT ACT AND THE LICENSE AGREEMENT, AND SUBJECT TO CIVIL AND CRIMINAL PENALTIES THEREUNDER.

101054067

cleaning is required to remove the highly flammable creosote deposits found in chimneys and connectors. Inspections should include such related items such as chimney flues, chimney caps, dampers, doors, screens, connectors, hearth extensions and clearances to combustibles.

Appliances located in buildings that are not owner occupied are less likely to receive attention or be observed and are therefore more likely to be neglected. Appliances of concern include water heaters, furnaces, boilers, room heaters, clothes dryers and cooking appliances.

Fireplaces and solid fuel-burning appliances must be installed and maintained in accordance with the IMC.

The appliance manufacturer's installation instructions and the IMC, *International Fuel Gas Code*® (IFGC®) and IPC should be consulted in determining if an appliance or mechanical equipment is installed properly.

603.2 Removal of combustion products. Fuel-burning equipment and appliances shall be connected to an *approved* chimney or vent.

Exception: Fuel-burning equipment and appliances that are *labeled* for unvented operation.

❖ All fuel-burning appliances are required to discharge the products of combustion (flue gases) to an approved chimney or vent (see exception). Chimneys and vents must be capable of creating sufficient draft to properly vent the appliances served. Appliances that are listed and labeled for unvented operation such as domestic cooking appliances, room heaters and gas-fired refrigerators are exempt from this requirement.

Some components of the combustion products produced by fuel-burning appliances are toxic to humans and animals and can cause illness and death. The most harmful component of combustion products is carbon monoxide (CO). Typical symptoms of CO poisoning are nausea, headache, dizziness, disorientation, confusion, rapid breathing, fatigue, flu-like symptoms and loss of consciousness. Exposure to CO is detrimental to health in all cases and can be lethal depending upon its concentration, the duration of exposure and the condition of the occupants. Combustion products must not be allowed to enter or leak into any occupiable or habitable space.

Chimneys and vents should be periodically inspected for deterioration or blockage that could impair their operation or allow combustion products to leak into the building. The appliance and equipment connections to a chimney or vent should also be inspected for deterioration, blockage or separation of connections.

Evidence of chimney or vent connector decay or rusting generally indicates improper draft. A venting system that creates insufficient draft or that is subject to backdraft (reverse flow) will experience accelerated deterioration because of the corrosive effect of the combustion products (flue gases). "Draft" is the pressure differential necessary to cause the flow of flue gases from the appliance or equipment to the chimney or vent and up to the outdoor atmosphere. Proper draft should be verified by a trained heating technician and should be checked each time the appliance or equipment is serviced.

The exception recognizes that a chimney or vent is not required for fuel-burning appliances listed and labeled for unvented operation. It is imperative that unvented appliances be operated and maintained in strict accordance with the manufacturer's instructions (see the IFGC for additional requirements for unvented room heaters).

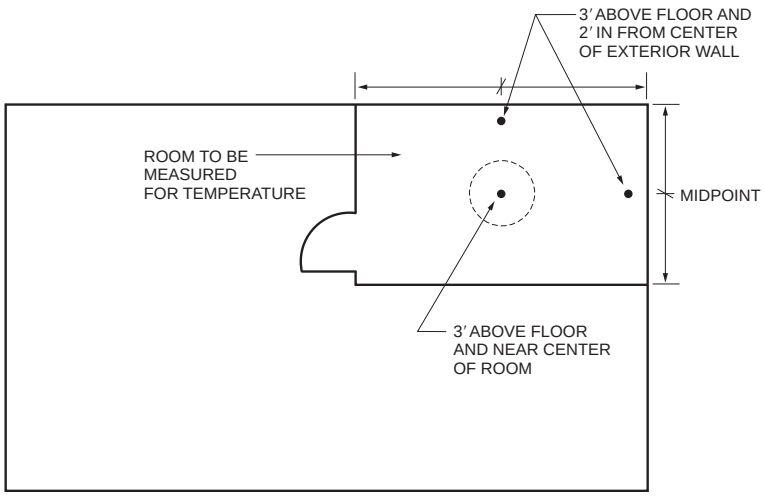

For SI: 1 foot = 304.8 mm.

Commentary Figure 602.5
ROOM TEMPERATURE MEASUREMENTS

INTERNATIONAL CODE COUNCIL®
Copyright © 2018 ICC. ALL RIGHTS RESERVED. Accessed by Jim Davis (JDavis@ShakopeeMN.gov), (City of Shakopee) Order Number #101054067 on Mar 17, 2021 01:42 PM (PDT) pursuant to License Agreement with ICC. No further reproduction, no further reproductions by any third party, or distribution authorized. Single user only, copying and networking prohibited. ANY UNAUTHORIZED REPRODUCTION OR DISTRIBUTION IS A VIOLATION OF THE FEDERAL COPYRIGHT ACT AND THE LICENSE AGREEMENT, AND SUBJECT TO CIVIL AND CRIMINAL PENALTIES THEREUNDER.

101054067

603.3 Clearances. Required clearances to combustible materials shall be maintained.

❖ Proper clearances must be maintained between combustible materials and all heat-producing appliances and equipment. Adequate clearances are necessary to prevent the possible ignition of combustibles. The required clearances for the labeled appliances and equipment must be maintained in accordance with the manufacturer's requirements. Clearances for chimneys, vents and their connectors are also specified in the IMC and IFGC.

Frequently, an inspector will encounter combustible materials that have been placed too close to heat-producing appliances and equipment after the initial installation. Combustible storage, furnishings and remodeling are typical examples of such encounters. Most occupants are unaware of the hazard created when they store combustibles near or in contact with heat-producing appliances.

It is imperative that adequate clearances be maintained to avoid a potential fire hazard.

603.4 Safety controls. Safety controls for fuel-burning equipment shall be maintained in effective operation.

❖ All appliances and heating equipment are equipped with safety controls and devices intended to prevent fire or explosion in the event of equipment malfunction or abnormal operation. Typical controls and devices are as follows: temperature limit switches; pressure limit switches; pressure relief valves; low-water cutoffs; stack controls; pilot safety controls; draft monitoring controls and flame supervision controls. These controls are designed to prevent such conditions as overheating, excessive pressures, loss of heat transfer medium, loss of ignition source, loss of venting means and loss of main flame, among others.

All such safety controls must be periodically tested and inspected to verify their proper functioning and assess their reliability. Such testing and inspection should be performed by trained technicians when the appliances are serviced and cleaned.

An inoperative or otherwise malfunctioning safety control or device could create an extreme life safety hazard.

603.5 Combustion air. A supply of air for complete combustion of the fuel and for *ventilation* of the space containing the fuel-burning equipment shall be provided for the fuel-burning equipment.

❖ Combustion air includes the air necessary for complete combustion of the fuel, the air required for draft hood dilution and the air necessary for ventilation of the enclosure in which the appliance is located. A lack of combustion air will result in the incomplete combustion of fuel that, in turn, causes soot production, increased CO production, serious appliance malfunction and the risk of fire or explosion. The lack of draft hood dilution air will result in improper draft and appliance venting. The incomplete combustion of fuel and improper draft and venting compound each other and greatly increase the risk of CO poisoning. The lack of ventilation air can result in excessive temperatures in the appliance enclosure, thereby introducing the risk of overheating the appliance and the risk of fire.

In existing structures, adequate combustion air provisions are often lacking or have been blocked, covered or otherwise defeated. Looking for proper combustion air supply is an important part of any inspection.

Fuel-burning equipment must be provided with combustion air in accordance with the IMC and IFGC.

603.6 Energy conservation devices. Devices intended to reduce fuel consumption by attachment to a fuel-burning appliance, to the fuel supply line thereto, or to the vent outlet or vent piping therefrom, shall not be installed unless *labeled* for such purpose and the installation is specifically *approved*.

❖ Energy-saving devices are required to bear the label of an approved testing agency, must be installed in accordance with the manufacturer's installation instructions and must be installed with the specific approval of the code official.

Improperly installed or applied energy-saving devices can adversely affect the operation of an appliance and cause it to become unsafe. A common example would be the improper installation of a flue damper or restrictor device in the chimney or vent connector of a fuel-burning appliance. The resultant installation could cause vent failure and subject the occupants to CO poisoning.

The installation of such devices would require a permit under the IFGC or IMC.

SECTION 604
ELECTRICAL FACILITIES

604.1 Facilities required. Every occupied building shall be provided with an electrical system in compliance with the requirements of this section and Section 605.

❖ This section prescribes the minimum electrical facilities that must be installed and maintained in all buildings used for human occupancy.

604.2 Service. The size and usage of appliances and equipment shall serve as a basis for determining the need for additional facilities in accordance with NFPA 70. *Dwelling units* shall be served by a three-wire, 120/240 volt, single-phase electrical service having a minimum rating of 60 amperes.

❖ This section prescribes the minimum size of the electrical service that must be provided for all structures. The electrical service consists of the service entrance conductors, metering devices, service grounding means, main disconnect, main overcurrent device and, typically, the distribution panelboard and all overcurrent devices. The size of the service is dependent upon the size of the load (demand). The total

INTERNATIONAL CODE COUNCIL®
Copyright © 2018 ICC. ALL RIGHTS RESERVED. Accessed by Jim Davis (JDavis@ShakopeeMN.gov), (City of Shakopee) Order Number #101054067 on Mar 17, 2021 01:42 PM (PDT) pursuant to License Agreement with ICC. No further reproduction, no further reproductions by any third party, or distribution authorized. Single user only, copying and networking prohibited. ANY UNAUTHORIZED REPRODUCTION OR DISTRIBUTION IS A VIOLATION OF THE FEDERAL COPYRIGHT ACT AND THE LICENSE AGREEMENT, AND SUBJECT TO CIVIL AND CRIMINAL PENALTIES THEREUNDER.

101054067

electrical usage or load must be determined as prescribed in NFPA 70. For dwelling units, the IRC also provides load calculation methods.

If the actual load exceeds the capacity of the service, this section is intended to prompt added capacity. In no case is the service for a dwelling unit permitted to be less than 60 amperes. Additionally, all dwelling unit services are to be 120/240 volt (three wire). The electrical usage in a typical dwelling unit today requires a service of at least a 60-ampere capacity to meet the occupants' needs. The requirement for a three-wire (120/240 volt) service is intended to allow the use of 240-volt appliances, such as clothes dryers, air conditioners and ranges. Additionally, appliances that operate at 240 volts consume less current, thereby conserving the remaining capacity of the service.

Overloading or constant loading to capacity subjects the service to excessive heating and component stress. Not only does this invite failure, but it also increases the risk of fire and creates the inconveniences of a nuisance circuit breaker tripping or fuse blowing. Nuisance fuse blowing, in turn, encourages the dangerous practice of replacing blown fuses with fuses of larger size. Overfusing is one of the largest potential causes of fire in any electrical system.

An inadequately sized service could also restrict the occupants' use of appliances by imposing nonsimultaneous use to avoid overloading the service.

A service determined to be undersized in accordance with this section and the requirements of NFPA 70 or the IRC should be enlarged as necessary.

604.3 Electrical system hazards. Where it is found that the electrical system in a structure constitutes a hazard to the *occupants* or the structure by reason of inadequate service, improper fusing, insufficient receptacle and lighting outlets, improper wiring or installation, *deterioration* or damage, or for similar reasons, the *code official* shall require the defects to be corrected to eliminate the hazard.

❖ Any electrical system deficiency or condition that is deemed hazardous to the occupants or to the structure must be abated to eliminate the hazard. Electrical system hazards include, but are not limited to, the following:

- Inadequate (undersized) service.
- Improper fusing and overcurrent protection.
- Insufficient receptacle distribution.
- Lack of sufficient lighting fixtures.
- Deteriorated, damaged, worn or otherwise defective wiring, equipment and appliances.
- Improperly installed or protected wiring methods.
- Lack of proper service or equipment grounding.
- Open splices in wiring.
- Inadequately supported devices, wiring or equipment.
- Any exposed conductors or components constituting a shock hazard.
- Missing or damaged device cover plates.
- Excessive use of extension cords.
- Overloaded receptacles or circuitry.
- Lack of ground fault circuit interrupter (GFCI) protection.

The most common hazard is improper overcurrent protection of conductors. Fuses and circuit breakers are devices designed to limit current flow to the maximum safe current-carrying capacity (ampacity) of a conductor. With rare exception, the conductor's current-carrying capacity (ampacity) must be greater than or at least equal to the ampere rating of the overcurrent device that supplies it. If a fuse or circuit breaker has a larger ampere-rating capacity than the conductors it is intended to protect, the device will permit the conductors to carry currents in excess of the conductors' capacity. The resultant overload will cause conductor heating, insulation deterioration and, possibly, a fire. The typical scenario involves an occupant who thinks he or she has "cured" a fuse-blowing problem by substituting fuses that are larger in size. In actuality, an extreme fire hazard has been created by eliminating the circuit conductor overcurrent protection. Type S tamper-proof fuses and adapters can be installed to prevent the occupants from installing the wrong size fuses.

604.3.1 Abatement of electrical hazards associated with water exposure. The provisions of this section shall govern the repair and replacement of electrical systems and equipment that have been exposed to water.

❖ The purpose of this section is to provide enforceable provisions to the code official that address hazards in electrical equipment that has been exposed to water. These provisions are derived from "Guidelines for Handling Water-damaged Electrical Equipment," published by the National Electrical Manufacturers Association (NEMA).

Section 604.3.1 defines the scope of the section as pertaining to electrical equipment and systems that have been exposed to water.

604.3.1.1 Electrical equipment. Electrical distribution equipment, motor circuits, power equipment, transformers, wire, cable, flexible cords, wiring devices, ground fault circuit interrupters, surge protectors, molded case circuit breakers, low-voltage fuses, luminaires, ballasts, motors and electronic control, signaling and communication equipment that have been exposed to water shall be replaced in accordance with the provisions of the *International Building Code*.

Exception: The following equipment shall be allowed to be repaired where an inspection report from the equipment manufacturer or *approved* manufacturer's representative indicates that the equipment has not sustained damage that requires replacement:

1. Enclosed switches, rated not more than 600 volts or less.

INTERNATIONAL CODE COUNCIL®
Copyright © 2018 ICC. ALL RIGHTS RESERVED. Accessed by Jim Davis (JDavis@ShakopeeMN.gov), (City of Shakopee) Order Number #101054067 on Mar 17, 2021 01:42 PM (PDT) pursuant to License Agreement with ICC. No further reproduction, no further reproductions by any third party, or distribution authorized. Single user only, copying and networking prohibited. ANY UNAUTHORIZED REPRODUCTION OR DISTRIBUTION IS A VIOLATION OF THE FEDERAL COPYRIGHT ACT AND THE LICENSE AGREEMENT, AND SUBJECT TO CIVIL AND CRIMINAL PENALTIES THEREUNDER.

101054067

2. Busway, rated not more than 600 volts.
3. Panelboards, rated not more than 600 volts.
4. Switchboards, rated not more than 600 volts.
5. Fire pump controllers, rated not more than 600 volts.
6. Manual and magnetic motor controllers.
7. Motor control centers.
8. Alternating current high-voltage circuit breakers.
9. Low-voltage power circuit breakers.
10. Protective relays, meters and current transformers.
11. Low- and medium-voltage switchgear.
12. Liquid-filled transformers.
13. Cast-resin transformers.
14. Wire or cable that is suitable for wet locations and whose ends have not been exposed to water.
15. Wire or cable, not containing fillers, that is suitable for wet locations and whose ends have not been exposed to water.
16. Luminaires that are listed as submersible.
17. Motors.
18. Electronic control, signaling and communication equipment.

❖ Listed in this section are certain types of electrical equipment that, if exposed to conditions such as submersion in floodwater or inundation by fire sprinkler discharge, must be replaced. Protective components—such as circuit breakers, overload relays, low voltage or medium voltage protective devices within a switchgear assembly, and fuses—are necessary for the safe operation of the distribution circuits and should be replaced when exposed to water. The ability of a transformer to operate as intended can be impaired by corrosion to the transformer core, flood debris deposited inside the transformer, or contamination of the transformer fluid. The exception to this section allows for repair of certain components of an electrical distribution system and certain electrical equipment provided that an inspection report from the equipment manufacturer or approved manufacturer's representative is submitted to the code official indicating that the level of damage to the equipment does not warrant replacement. Note that panelboards and switchboards listed in the exception refer to the boards, busses and related hardware, not the circuit breakers that they hold.

604.3.2 Abatement of electrical hazards associated with fire exposure. The provisions of this section shall govern the repair and replacement of electrical systems and equipment that have been exposed to fire.

❖ This section defines the scope of the section as pertaining to electrical equipment and systems that have been exposed to fire.

604.3.2.1 Electrical equipment. Electrical switches, receptacles and fixtures, including furnace, water heating, security system and power distribution circuits, that have been exposed to fire, shall be replaced in accordance with the provisions of the *International Building Code*.

Exception: Electrical switches, receptacles and fixtures that shall be allowed to be repaired where an inspection report from the equipment manufacturer or *approved* manufacturer's representative indicates that the equipment has not sustained damage that requires replacement.

❖ This section lists the type of electrical components and equipment that must be replaced, where they have been exposed to fire. Note that the code does not elaborate on what is meant by "exposed to fire," but the assumption is that the equipment and components have been subjected to heat, smoke and/or direct flame impingement. The ability of electrical switches, receptacles and fixtures—including furnace, water heating, security system and power distribution circuits—to operate as intended can be impaired by exposure to fire. The exception to this section allows for repair of these components provided that an inspection report from the equipment manufacturer or approved manufacturer's representative is submitted to the code official indicating that the level of damage to the equipment does not warrant replacement.

SECTION 605
ELECTRICAL EQUIPMENT

605.1 Installation. Electrical equipment, wiring and appliances shall be properly installed and maintained in a safe and *approved* manner.

❖ This section provides necessary safety requirements for electrical equipment, wiring and appliances.

All electrical equipment, wiring and appliances must be properly installed and maintained in accordance with this code and NFPA 70 or the *International Residential Code*® (IRC®). It is the responsibility of the building owner or operator to provide and safely maintain the electrical facilities required herein.

605.2 Receptacles. Every *habitable space* in a dwelling shall contain not less than two separate and remote receptacle outlets. Every laundry area shall contain not less than one grounding-type receptacle or a receptacle with a ground fault circuit interrupter. Every *bathroom* shall contain not less than one receptacle. Any new *bathroom* receptacle outlet shall have ground fault circuit interrupter protection. All receptacle outlets shall have the appropriate faceplate cover for the location.

❖ Every room or space in a dwelling unit that is used for living, sleeping, eating or cooking must be provided with at least two separate receptacle outlets. Such outlets must be as remote from each other as practicable. The quantity of receptacles required by this section is far less than that required by NFPA 70 and

INTERNATIONAL CODE COUNCIL®
Copyright © 2018 ICC. ALL RIGHTS RESERVED. Accessed by Jim Davis (JDavis@ShakopeeMN.gov), (City of Shakopee) Order Number #101054067 on Mar 17, 2021 01:42 PM (PDT) pursuant to License Agreement with ICC. No further reproduction, no further reproductions by any third party, or distribution authorized. Single user only, copying and networking prohibited. ANY UNAUTHORIZED REPRODUCTION OR DISTRIBUTION IS A VIOLATION OF THE FEDERAL COPYRIGHT ACT AND THE LICENSE AGREEMENT, AND SUBJECT TO CIVIL AND CRIMINAL PENALTIES THEREUNDER.

101054067

the IRC for new construction, but is considered to be a reasonable compromise for existing structures.

This provision is intended to minimize or eliminate the use of extension cords. The amount of electrical current that any extension cord can safely conduct is limited by the size of its conductors. This principle is not understood by much of the general population. As a result, extension cords are commonly overloaded by the connection of either too many appliances or any loads in excess of the cord's capacity. Overloading extension cords causes an increase in the conductor's temperature. This increase can exceed the temperature rating of the conductor's insulation, causing it to melt, decompose or burn. The burning insulation can easily start a fire, and the resultant loss of conductor insulation can cause a short circuit or ground fault that can also act as a source of ignition. The buildup of heat in an extension cord is often made worse by excessive cord length and by the insulating effect of rugs that often cover these cords. Extension cords are much more susceptible to physical damage than permanent wiring methods. Damage to cords increases the likelihood of shorts, ground faults and poor connections, all of which can cause a fire. In addition to the fire hazard, extension cords pose a tripping hazard to the occupants and, when damaged, pose an electric shock hazard.

Every laundry room is required to have at least one grounded-type receptacle outlet. Appliances typically used in a laundry room require a grounding conductor for safe operation. Grounding appliances reduces the risk of electrical shock, which can occur when an occupant comes in contact with a defective appliance. This section appears to allow a GFCI-protected receptacle outlet in lieu of a grounded-type receptacle; however, this is only allowed for very limited circumstances by NFPA 70. As a general rule, GFCI protection is not a substitute for grounding-type receptacles. Where grounding-type receptacles cannot be installed, a GFCI receptacle offers a measure of protection from electrical shock. Adding GFCI protection to existing receptacle outlets is generally simple and inexpensive. Where existing boxes are small or crowded, surface extension boxes can be added to make room or GFCI circuit breakers can be used for the branch circuit.

Every bathroom must have at least one receptacle outlet to accommodate the many grooming and personal hygiene appliances that are commonly used in bathrooms. This requirement also applies to toilet rooms with lavatories that do not contain bathing fixtures, as they could also be used for grooming and personal hygiene purposes. If a bathroom receptacle outlet has to be installed in order to achieve compliance with this section, this code, NFPA 70 and the IRC, all would require GFCI protection for such outlet.

To protect occupants from accidental contact with electrical wiring or components, appropriate faceplates are required for all receptacles.

The installation of a receptacle where one previously did not exist is considered new work and must comply with the provisions of NFPA 70 or the IRC.

605.3 Luminaires. Every public hall, interior stairway, *toilet room*, kitchen, *bathroom*, laundry room, boiler room and furnace room shall contain not less than one electric luminaire. Pool and spa luminaires over 15 V shall have ground fault circuit interrupter protection.

❖ Permanent lighting outlets must be provided to illuminate hallways, stairways, kitchens, bathrooms and laundry, toilet, furnace and boiler rooms. The activities in such spaces are not compatible with portable lighting such as floor or table lamps; therefore, permanent lighting outlets (fixtures/luminaires) are required. In all other spaces, it is assumed that the occupants will provide lamps or other portable fixtures to meet their artificial lighting needs when natural lighting does not exist. Adequate lighting is necessary for occupants to traverse stairs and corridors without undue hazard, to allow for the proper use of plumbing fixtures and appliances, and to allow for inspection and servicing of appliances.

Furnace and boiler rooms are defined terms in the IMC, and the term "furnace room" also applies to a room containing a water heater.

Lighting related to pools and spas is required to be protected with GFCIs when it is over 15 volts. Providing this protection in these wet locations results in safer conditions for the users.

605.4 Wiring. Flexible cords shall not be used for permanent wiring, or for running through doors, windows, or cabinets, or concealed within walls, floors, or ceilings.

❖ The use of flexible cords in place of permanent fixed wiring is typically an indication of inadequate electrical wiring capacity or incompatible demands. Physical damage to flexible cords caused by concealment or improper or inadequate maintenance could result in localized resistance heating, shorts and ground faults.

The amount of electrical current that any flexible cord can safely conduct is limited by the size of its conductor, its insulation type and its environment. This principle is often not understood by the general public. As a result, extension cords are commonly overloaded by connecting appliances and other loads in excess of the cord's capacity.

Overloading of flexible cords causes an increase in the conductor's temperature. This increase in temperature can exceed the temperature rating of the conductor insulation, causing it to melt, decompose or burn. The burning insulation can ignite other combustible materials. The resulting loss of conductor insulation can also cause a short circuit or ground fault that can act as a source of ignition. The buildup of heat in an extension cord is often made worse by excessive cord length and by the insulating effect of rugs that often cover extension cords. Flexible cords are much more susceptible to physical damage than

INTERNATIONAL CODE COUNCIL®
Copyright © 2018 ICC. ALL RIGHTS RESERVED. Accessed by Jim Davis (JDavis@ShakopeeMN.gov), (City of Shakopee) Order Number #101054067 on Mar 17, 2021 01:42 PM (PDT) pursuant to License Agreement with ICC. No further reproduction, no further reproductions by any third party, or distribution authorized. Single user only, copying and networking prohibited. ANY UNAUTHORIZED REPRODUCTION OR DISTRIBUTION IS A VIOLATION OF THE FEDERAL COPYRIGHT ACT AND THE LICENSE AGREEMENT, AND SUBJECT TO CIVIL AND CRIMINAL PENALTIES THEREUNDER.

101054067

permanent wiring. Damage to flexible cords increases the likelihood of shorts and poor connections, both of which can cause a fire.

In addition to the fire hazard, extension cords pose a tripping hazard to the occupants and, when damaged, can pose an electrical shock hazard. Securing flexible cords to a wall baseboard, door jambs, etc., with nails, staples or other fasteners to eliminate tripping hazards can create another dangerous condition by pinching or piercing the cord and causing shorts or faults that could lead to ignition.

SECTION 606
ELEVATORS, ESCALATORS AND DUMBWAITERS

606.1 General. Elevators, dumbwaiters and escalators shall be maintained in compliance with ASME A17.1. The most current certificate of inspection shall be on display at all times within the elevator or attached to the escalator or dumbwaiter, be available for public inspection in the office of the building *operator* or be posted in a publicly conspicuous location *approved* by the *code official*. The inspection and tests shall be performed at not less than the periodic intervals listed in ASME A17.1, Appendix N, except where otherwise specified by the authority having jurisdiction.

❖ Elevators, escalators and dumbwaiters must be maintained in compliance with ASME A17.1, *Safety Code for Elevators and Escalators*. ASME A17.1 contains requirements for the periodic inspection and testing necessary to detect any possible defects. The safety of the occupants is dependent upon routine safety checks performed by competent elevator service technicians.

Displaying the certificate of inspection is an aid to building inspectors and provides the users of the machinery with some confidence in its safety. This requirement will also encourage the owner to obtain the required inspections. Additionally, the option to post the certificate in a publicly conspicuous location approved by the code official allows a building operator to request that the certificate be placed in a location other than in the elevator or on the escalator or dumbwaiter, provided that the location is publicly conspicuous and approved by the code official.

606.2 Elevators. In buildings equipped with passenger elevators, not less than one elevator shall be maintained in operation at all times when the building is occupied.

Exception: Buildings equipped with only one elevator shall be permitted to have the elevator temporarily out of service for testing or servicing.

❖ If a building has more than one passenger elevator, at least one such elevator must be kept operational during all periods of building occupancy. As indicated in the exception, a building with only one elevator is allowed to have its elevator temporarily out of service only for the purpose of maintenance, repair or testing.

SECTION 607
DUCT SYSTEMS

607.1 General. Duct systems shall be maintained free of obstructions and shall be capable of performing the required function.

❖ Exhaust ducts for toilet rooms, bathrooms, kitchens and clothes dryers require maintenance to prevent blockages and obstructions that can cause appliance/equipment malfunction, poor performance and potential fire hazards. Heating, cooling and ventilation ducts also must be maintained to allow proper airflow, to maintain proper HVAC equipment operation and to help eliminate airborne contaminants that could cause health hazards. Ducts can collect hazardous quantities of grease, lint, dust and debris that could be potential fire hazards. Duct systems of all types are typically ignored by building owners and occupants and thus receive little or no maintenance.

Bibliography

The following resource materials were used in the preparation of the commentary for this chapter of the code:

ASME A17.1/CSA B44—2013, *Safety Code For Elevators and Escalators*. New York: American Society of Mechanical Engineers, 2013.

IFGC—2018, *International Fuel Gas Code*. Washington, DC: International Code Council, 2017.

IMC—2018, *International Mechanical Code*. Washington, DC: International Code Council, 2017.

IPC—2018, *International Plumbing Code*. Washington, DC: International Code Council, 2017.

IRC—2018, *International Residential Code*. Washington, DC: International Code Council, 2017.

NFPA 70—14, *National Electrical Code*. Quincy, MA: National Fire Protection Association, 2013.

INTERNATIONAL CODE COUNCIL®
Copyright © 2018 ICC. ALL RIGHTS RESERVED. Accessed by Jim Davis (JDavis@ShakopeeMN.gov), (City of Shakopee) Order Number #101054067 on Mar 17, 2021 01:42 PM (PDT) pursuant to License Agreement with ICC. No further reproduction, no further reproductions by any third party, or distribution authorized. Single user only, copying and networking prohibited. ANY UNAUTHORIZED REPRODUCTION OR DISTRIBUTION IS A VIOLATION OF THE FEDERAL COPYRIGHT ACT AND THE LICENSE AGREEMENT, AND SUBJECT TO CIVIL AND CRIMINAL PENALTIES THEREUNDER.

101054067

INTERNATIONAL CODE COUNCIL®

Copyright © 2018 ICC. ALL RIGHTS RESERVED. Accessed by Jim Davis (JDavis@ShakopeeMN.gov), (City of Shakopee) Order Number #101054067 on Mar 17, 2021 01:42 PM (PDT) pursuant to License Agreement with ICC. No further reproduction, no further reproductions by any third party, or distribution authorized. Single user only, copying and networking prohibited. ANY UNAUTHORIZED REPRODUCTION OR DISTRIBUTION IS A VIOLATION OF THE FEDERAL COPYRIGHT ACT AND THE LICENSE AGREEMENT, AND SUBJECT TO CIVIL AND CRIMINAL PENALTIES THEREUNDER.

101054067

Chapter 7: Fire Safety Requirements

General Comments

Chapter 7 establishes minimum requirements for fire safety facilities and fire protection systems.

A critical element that must be investigated during an inspection is the condition of fire safety systems.

These provisions take on even greater importance in those jurisdictions where periodic fire inspections are not conducted in accordance with a comprehensive fire code.

In jurisdictions where fire inspections are regularly performed on existing facilities, all inspections must be coordinated between the appropriate officials to alleviate multiple and duplicative notices and, at the worst, conflicting instructions.

A great potential for fatal fires exists where people sleep—dwelling units, hotels, motels, nursing homes, etc. The reasons for the increased hazard are obvious: there are often delayed reactions before people notice a fire (occupants waking from sleep are temporarily confused), rooms are darkened and the occupants are dressed in bedclothes. All of these circumstances reduce the reaction time of the occupants and increase the likelihood that they will make a fatal misjudgment.

Purpose

Building codes regulating new construction are intended to verify, prior to occupancy, that the building has been constructed in a manner that will provide the occupants a relatively safe and secure environment. Once these new structures are occupied, a variety of hazards inherent in their use may arise. Often, these hazards are unanticipated and can affect the overall safety of the occupants.

The purpose of Chapter 7 is to address those fire hazards that arise as the result of a building's occupancy. It also provides minimum requirements for the fire safety issues that are most likely to arise in older buildings.

SECTION 701 GENERAL

❖ This section establishes the overall goal of the chapter and outlines who is responsible for complying with its provisions.

701.1 Scope. The provisions of this chapter shall govern the minimum conditions and standards for fire safety relating to structures and exterior *premises*, including fire safety facilities and equipment to be provided.

❖ In the International Codes® (I-Codes®), the foremost code to address fire safety in existing buildings is the *International Fire Code*® (IFC®). Fire safety is also within the scope of this code; however, for correlation with the IFC most of the requirements of Chapter 7 either parallel or directly reference that code. As stated in the preface to this commentary, sections of this chapter with the [F] designation in front of the section number are controlled initially by the International Fire Code Development Committee during the annual code change process of the International Code Council® (ICC®), thereby preventing conflicts between this code and the IFC.

Fire safety requirements having to do with means of egress, fire-resistance rating of building elements and fire protection systems, such as sprinklers and smoke detectors, are addressed in this chapter. Fire safety topics such as storage of combustibles, use or storage of hazardous materials and the regulation of certain activities or operations within buildings that contribute to the fire hazard are covered exclusively in the IFC.

701.2 Responsibility. The *owner* of the *premises* shall provide and maintain such fire safety facilities and equipment in compliance with these requirements. A person shall not occupy as *owner-occupant* or permit another person to occupy any *premises* that do not comply with the requirements of this chapter.

❖ The owner of the premises should provide and maintain such fire safety facilities and equipment in compliance with these requirements. A person should not occupy as owner-occupant or allow another person to occupy any premises that does not comply with the requirements of this chapter.

This section clearly establishes that the owner of the premises is responsible for compliance with these requirements. Whereas occupants who are not owners have some responsibility in regard to clean and safe conditions within individual dwelling units (see Section 301.2), the requirements of this chapter pertain to building systems and components that are not typically under the control of the occupants.

SECTION 702 MEANS OF EGRESS

❖ Means of egress in existing buildings is regulated by the IFC. The IFC contains provisions for number of exits, egress width, stairs, guards, handrails, corri-

INTERNATIONAL CODE COUNCIL®
Copyright © 2018 ICC. ALL RIGHTS RESERVED. Accessed by Jim Davis (JDavis@ShakopeeMN.gov), (City of Shakopee) Order Number #101054067 on Mar 17, 2021 01:42 PM (PDT) pursuant to License Agreement with ICC. No further reproduction, no further reproductions by any third party, or distribution authorized. Single user only, copying and networking prohibited. ANY UNAUTHORIZED REPRODUCTION OR DISTRIBUTION IS A VIOLATION OF THE FEDERAL COPYRIGHT ACT AND THE LICENSE AGREEMENT, AND SUBJECT TO CIVIL AND CRIMINAL PENALTIES THEREUNDER.

101054067

dors, dead ends, obstructed exits, exit signs and other requirements for evaluating the means of egress in existing buildings. Aisles, locked doors and emergency escape openings are life safety features that are frequently affected by routine operations in existing buildings, and can be inspected by property maintenance inspectors in the course of a typical inspection. These topics, therefore, are included in the subsections of Section 702.

[F] 702.1 General. A safe, continuous and unobstructed path of travel shall be provided from any point in a building or structure to the *public way*. Means of egress shall comply with the *International Fire Code.*

❖ Even a slight delay in a fire situation can mean the difference between life and death. Dangerous levels of smoke can develop in a deceptively quick manner at the early stages of a fire, and obstruction to means of egress or insufficient means of egress very often leads to tragedy in a fire.

This section prohibits obstruction of corridors, hallways and stairs by miscellaneous storage that could delay egress. It also prohibits dead-end corridors or passageways that could cause confusion or require occupants to retrace their steps to find a way out of the building. Specific requirements for means of egress, such as permissible length of dead-end corridors or required means of egress width, are found in the IFC.

[F] 702.2 Aisles. The required width of aisles in accordance with the *International Fire Code* shall be unobstructed.

❖ Assembly occupancies that contain seats, tables, displays and similar furnishings or equipment present a unique challenge for efficient and orderly exiting in an emergency situation. For this reason, the IFC contains detailed requirements for the configuration, width and availability of aisles in these occupancies. This section requires aisles to be unobstructed so that they will serve their intended (and required) function.

[F] 702.3 Locked doors. Means of egress doors shall be readily openable from the side from which egress is to be made without the need for keys, special knowledge or effort, except where the door hardware conforms to that permitted by the *International Building Code*.

❖ One of the fundamental principles of means of egress in both new and existing buildings is that doors must be readily operable from the "egress side" (the side occupants approach in order to exit the building). Locks that require key operation from the inside are prohibited except in very limited circumstances involving security at main entrance doors for certain occupancies as prescribed in the *International Building Code*® (IBC®). Locks that are operated from the interior, such as thumb turns or flush bolts, are typically prohibited since they require special knowledge or effort, although this is subject to the judgement of the code official in existing buildings. Doors that are locked from the exterior of the building but are released by the unlatching mechanism from the interior, such as panic hardware and security hardware involving doorknobs or lever mechanisms, are the preferred alternative if security is needed.

[F] 702.4 Emergency escape openings. Required emergency escape openings shall be maintained in accordance with the code in effect at the time of construction, and the following. Required emergency escape and rescue openings shall be operational from the inside of the room without the use of keys or tools. Bars, grilles, grates or similar devices are permitted to be placed over emergency escape and rescue openings provided that the minimum net clear opening size complies with the code that was in effect at the time of construction and such devices shall be releasable or removable from the inside without the use of a key, tool or force greater than that which is required for normal operation of the escape and rescue opening.

❖ This section takes into account that many changes have occurred over the years in the many editions of the construction codes. The provisions for emergency escape and rescue openings are only subject to the code that is in effect at the time of construction, rather than expecting all structures to retroactively meet the requirements of each new code.

"Required emergency escape openings" refers to the escape windows and doors that are required for sleeping rooms and basements in new construction. In the IBC, emergency escape openings are required from all basements as well as all sleeping rooms; however, codes for new construction prior to the development of the IBC did not require emergency escape windows in basements without sleeping rooms.

This section is intended to ensure that emergency escape openings required at the time of a building's construction remain unobstructed. It prohibits the installation of security devices on these required openings unless the windows or doors provide a net clear opening of at least that which is required for new construction in accordance with the IBC. If installed, these devices must be removable (or movable to provide the required net clear opening space) in a manner that facilitates the quick use of the window in an emergency situation; therefore, security devices that require the unscrewing of screws or bolts, prying with a bar or unlocking with a key in order to be removed or moved are not permitted on these openings. In addition, they must not require excessive force for their removal, since they may need to be operated by children or the elderly.

SECTION 703
FIRE-RESISTANCE RATINGS

❖ Required fire-resistance-rated walls and opening protectives are those elements that are required to be rated in accordance with the code that was in effect at the time of construction. This section requires that these be maintained so that they will perform their intended function.

INTERNATIONAL CODE COUNCIL®
Copyright © 2018 ICC. ALL RIGHTS RESERVED. Accessed by Jim Davis (JDavis@ShakopeeMN.gov), (City of Shakopee) Order Number #101054067 on Mar 17, 2021 01:42 PM (PDT) pursuant to License Agreement with ICC. No further reproduction, no further reproductions by any third party, or distribution authorized. Single user only, copying and networking prohibited. ANY UNAUTHORIZED REPRODUCTION OR DISTRIBUTION IS A VIOLATION OF THE FEDERAL COPYRIGHT ACT AND THE LICENSE AGREEMENT, AND SUBJECT TO CIVIL AND CRIMINAL PENALTIES THEREUNDER.

101054067

[F] 703.1 Fire-resistance-rated assemblies. The provisions of this chapter shall govern maintenance of the materials, systems and assemblies used for structural fire resistance and fire-resistance-rated construction separation of adjacent spaces to safeguard against the spread of fire and smoke within a building and the spread of fire to or from buildings.

❖ This section introduces the requirements for maintaining the integrity of fire-resistance-rated assemblies and prescribes the types of floor opening protection required in existing buildings. The provisions of this section apply to the ongoing maintenance of the materials, assemblies and systems used to protect against the passage of fire and smoke within and between buildings. The assemblies outlined herein provide various degrees of protection. The required fire-resistance rating varies with the potential fire hazard associated with type of construction, occupancy, height and area of the building and degree of protection for different elements of the means of egress. The potential fire hazard associated with various occupancies is reflected in the IBC. Chapter 7 of the IBC provides the details and the extent of the protection (horizontal and vertical continuity); however, the actual fire-resistance-rated construction is mandated by provisions in Chapters 4, 5, 6, 7 and 10 of the IBC.

[F] 703.2 Unsafe conditions. Where any components are not maintained and do not function as intended or do not have the fire resistance required by the code under which the building was constructed or altered, such components or portions thereof shall be deemed unsafe conditions in accordance with Section 111.1.1 of the *International Fire Code*. Components or portions thereof determined to be unsafe shall be repaired or replaced to conform to that code under which the building was constructed or altered. Where the condition of components is such that any building, structure or portion thereof presents an imminent danger to the occupants of the building, structure or portion thereof, the fire code official shall act in accordance with Section 111.2 of the *International Fire Code*.

❖ This section is intended to clarify to code officials, designers, contractors and property owners that a building's fire-resistance-rated construction must be maintained at the original level of safety required by the codes that were applicable when the building was constructed or last remodeled. Failure to maintain fire-resistant components to that level of safety will result in the component being declared unsafe in accordance with Section 108.1 of the code and repair or restoration being required.

The requirement that components meet the requirements of the applicable code at the time the building was constructed or last remodeled is sometimes viewed as difficult to enforce given uncertainty over the relevant code. However, communities should have some record of when a building was constructed, and knowing the year of construction should make it relatively easy to determine an edition of the code that was published close to or prior to that year. In many communities, local historical societies can also be helpful in doing architectural historical research to determine the year of construction. These types of methods for determining the originally applicable code, if any, could be viewed as haphazard and arbitrary, but they can be considered better than trying to make a building constructed 30, 50 or 100 years ago comply with today's requirements. In the event that no information of any kind can be found to shed light on an original construction date, this chapter provides for an acceptable level of safety and can be retroactively required where deemed appropriate by the fire code official.

This section also provides that where component conditions are so bad due to lack of maintenance as to constitute a clear and present threat to the safety of the occupants, the fire code official must take the steps required by Section 108.2.

[F] 703.3 Maintenance. The required fire-resistance rating of fire-resistance-rated construction, including walls, firestops, shaft enclosures, partitions, smoke barriers, floors, fire-resistive coatings and sprayed fire-resistant materials applied to structural members and joint systems, shall be maintained. Such elements shall be visually inspected annually by the owner and repaired, restored or replaced where damaged, altered, breached or penetrated. Records of inspections and repairs shall be maintained. Where concealed, such elements shall not be required to be visually inspected by the owner unless the concealed space is accessible by the removal or movement of a panel, access door, ceiling tile or entry to the space. Openings made therein for the passage of pipes, electrical conduit, wires, ducts, air transfer and any other reason shall be protected with approved methods capable of resisting the passage of smoke and fire. Openings through fire-resistance-rated assemblies shall be protected by self- or automatic-closing doors of approved construction meeting the fire protection requirements for the assembly.

❖ The code mandates that all equipment, systems, devices and safeguards required by the current and previously adopted codes be maintained in good working order (see Section 102.2). This section reiterates that requirement specifically for fire-resistance-rated assemblies in existing buildings.

Once a building is occupied, its component parts are often damaged, altered or penetrated for installation of new piping, wiring and the like. These actions may reduce the effectiveness of assemblies that must be fire-resistance rated. This section requires the building owner, annually, to visually inspect non-concealed elements and that any damage to a fire-resistance-rated assembly be repaired in a manner that restores the original required performance characteristics. Concealed elements must be visually inspected if they may be accessed by a door, removable ceiling tile, access panel or the like. Similarly, if a fire-resistance-rated assembly is altered or penetrated, the alteration or penetration must comply with the applicable requirements of the IBC for the particular type of alteration or penetration.

INTERNATIONAL CODE COUNCIL®
Copyright © 2018 ICC. ALL RIGHTS RESERVED. Accessed by Jim Davis (JDavis@ShakopeeMN.gov), (City of Shakopee) Order Number #101054067 on Mar 17, 2021 01:42 PM (PDT) pursuant to License Agreement with ICC. No further reproduction, no further reproductions by any third party, or distribution authorized. Single user only, copying and networking prohibited. ANY UNAUTHORIZED REPRODUCTION OR DISTRIBUTION IS A VIOLATION OF THE FEDERAL COPYRIGHT ACT AND THE LICENSE AGREEMENT, AND SUBJECT TO CIVIL AND CRIMINAL PENALTIES THEREUNDER.

101054067

This section also requires that written records of maintenance and repairs to rated assemblies be kept and should indicate the date and time of, and the name of the person conducting the inspection or repair for each rated assembly. These records must be maintained by the owner and made available to the fire code official for review when requested. This requirement relieves the fire code official of the administrative burden of maintaining test records.

[F] 703.3.1 Fire blocking and draft stopping. Required fire blocking and draft stopping in combustible concealed spaces shall be maintained to provide continuity and integrity of the construction.

❖ Fireblocking and draftstopping, as defined in Chapter 2 of the IBC, slow the spread of fire and the products of combustion through concealed spaces within a building. To fulfill their intended function, fireblocking and draftstopping must be properly maintained. Most frequently, damage or repairs to other building components, such as mechanical piping, results in fireblocking or draftstopping being removed and not properly replaced. This section specifically requires that the fireblocking or draftstopping in these areas be maintained and therefore replaced or restored.

[F] 703.3.2 Smoke barriers and smoke partitions. Required smoke barriers and smoke partitions shall be maintained to prevent the passage of smoke. Openings protected with approved smoke barrier doors or smoke dampers shall be maintained in accordance with NFPA 105.

❖ Smoke barriers divide areas of a building into separate smoke compartments to create an area of safety for occupants. A smoke barrier is designed and installed in accordance with IBC Section 709 to resist fire and smoke spread so that occupants can be evacuated or relocated to adjacent smoke compartments (see Chapter 2 of the IBC for definitions of "Smoke barrier" and "Smoke compartment"). This concept has proven effective in Group I-2 and I-3 occupancies, and Sections 407.5 and 408.6 of the IBC identify where smoke barriers are required in those occupancies. Smoke barriers may also be used as portions of other applications, such as smoke control systems (see Section 909.5 of the IBC), separation of accessible areas of refuge in accessible means of egress (see Section 1009.6.4 of the IBC), compartmentation of underground buildings (see Section 405.4.2 of the IBC) and elevator lobbies in underground buildings (see Section 405.4.3 of the IBC), FSAE lobbies (see Section 3007.6.2 of the IBC) and occupant evacuation elevator lobbies (see Section 3008.6.2 of the IBC), among others. Other than the wall itself, all of the elements in the smoke barrier that can potentially allow smoke travel through the smoke barrier are required to have a quantified resistance to leakage. This includes doors, joints, through penetrations and dampers. The maximum leakage limits are as established in the individual code sections referenced above for each element. A smoke barrier is not intended or expected to be exposed to fire for extended periods and is, therefore, not required to have a fire-resistance rating exceeding 1 hour. Also, the occupancies in which smoke barriers are required are generally required to be sprinklered by Section 903 of the code. Smoke barriers are to be continuous from outside wall to outside wall and from the top of the foundation or floor/ceiling assembly below to the underside of the floor or roof sheathing, deck or slab. The provisions require the barrier to be continuous through all concealed and interstitial spaces, including suspended ceilings and the space between the ceiling and the floor or roof sheathing, deck or slab above. Smoke barriers are not required to extend through interstitial spaces if the space is designed and constructed such that fire and smoke will not spread from one smoke compartment to another; therefore, the construction assembly forming the bottom of the interstitial space must provide the required fire-resistance rating and be capable of resisting the passage of smoke from the spaces below.

Smoke partitions are nonrated walls that serve to resist the spread of fire and the unmitigated movement of smoke for an unspecified period of time. Their primary purpose is to prevent the ready and quick passage of smoke into corridors in Group I-2 or for elevator lobby protection in a sprinklered building. Unlike 1-hour fire-resistance-rated smoke barriers, unless required by the IBC, smoke partitions are not required to have a fire-resistance rating. Smoke partitions are intended to provide less protection than a smoke barrier, and therefore are not required to be continuous through the concealed spaces and through the ceiling. The construction of a smoke partition is prescribed in Section 710 of the IBC; however, the level of performance or a method of testing them is not provided.

Because these assemblies and their opening protectives are critical life safety components of a building, they must be maintained throughout the life of the building. Opening protective maintenance provisions for these types of assemblies are contained in NFPA 105. For further information on incidental uses, smoke barriers and smoke partitions, see the commentary to Sections 509, 709 and 710 of the IBC, respectively.

[F] 703.3.3 Fire walls, fire barriers, and fire partitions. Required fire walls, fire barriers and fire partitions shall be maintained to prevent the passage of fire. Openings protected with approved doors or fire dampers shall be maintained in accordance with NFPA 80.

❖ Fire walls, fire barriers and fire partitions are also key components in a passive fire- and life-safety design. Fire walls constructed in accordance with Section 706 of the IBC serve to create separate buildings (see the commentary to the definition of "Area, building" in Chapter 2); therefore, all applicable provisions of the code are applied individually to the building on each side of the fire wall. As such, the fire wall must also provide the same protection afforded by exterior

INTERNATIONAL CODE COUNCIL®
Copyright © 2018 ICC. ALL RIGHTS RESERVED. Accessed by Jim Davis (JDavis@ShakopeeMN.gov), (City of Shakopee) Order Number #101054067 on Mar 17, 2021 01:42 PM (PDT) pursuant to License Agreement with ICC. No further reproduction, no further reproductions by any third party, or distribution authorized. Single user only, copying and networking prohibited. ANY UNAUTHORIZED REPRODUCTION OR DISTRIBUTION IS A VIOLATION OF THE FEDERAL COPYRIGHT ACT AND THE LICENSE AGREEMENT, AND SUBJECT TO CIVIL AND CRIMINAL PENALTIES THEREUNDER.

101054067

walls, namely: structural integrity, structural independence and adequate fire resistance for exposure protection.

Fire barriers constructed in accordance with Section 707 of the IBC provide a higher degree of protection than fire partitions, but lack the inherent structural integrity of fire walls. Unlike fire partitions, there are no circumstances under which a fire barrier wall is permitted to terminate at a ceiling. Fire barriers are used for a variety of purposes, including but not limited to, separating exits and certain areas of refuge, mixed occupancies and incidental use areas, shafts, floor opening enclosures, hazardous materials control areas and fire areas. It is important to note that, since fire barriers are intended to provide a reliable subdivision of areas, the construction that structurally supports the assembly is required to provide and maintain at least the same hourly fire-resistance rating as the fire barrier being supported.

Fire partitions constructed in accordance with Section 708 of the IBC are wall assemblies that enclose exit access corridors; separate tenant spaces in covered malls, dwelling units and sleeping units; and separate elevator lobbies from the balance of a floor. Openings in fire partitions must be properly protected, but the total area of openings in a fire partition is not limited. Unlike the continuity requirements for fire walls and fire barriers, fire partition continuity must only be continuous from floor slab to the floor slab or roof deck above or to the ceiling of a fire-resistance-rated floor/ceiling or roof/ceiling assembly. Although fire partitions must normally be supported by construction having a comparable fire-resistance rating in buildings of Type IIB, IIIB and VB construction, as defined in the IBC, Section 708.4 of that code does not require such supportive construction for sleeping units and tenant separations and exit access corridor walls.

The IBC includes requirements for fire-resistance rating, continuity and opening and penetration protection in these types of assemblies. Because these assemblies and their opening protectives are critical life safety components of a building, they must be maintained throughout the life of the building. Opening protective maintenance provisions for these types of assemblies are contained in NFPA 80. For further information on fire walls, fire barriers and fire partitions, see the commentaries to Sections 706, 707 and 708 of the IBC, respectively.

[F] 703.4 Opening protectives. Opening protectives shall be maintained in an operative condition in accordance with NFPA 80. The application of field-applied labels associated with the maintenance of opening protectives shall follow the requirements of the approved third-party certification organization accredited for listing the opening protective. Fire doors and smoke barrier doors shall not be blocked or obstructed, or otherwise made inoperable. Fusible links shall be replaced whenever fused or damaged. Fire door assemblies shall not be modified.

❖ Openings in fire-resistance-rated assemblies must be protected to prevent the passage of fire in accordance with Section 716 of the IBC. After opening protectives are installed and approved, they may become damaged, corroded or otherwise less effective than required. This section specifically requires that all opening protectives required by the IBC be maintained in compliance with NFPA 80 so that they can perform their intended function, which is to prevent the passage of smoke, fire or combustion products through openings in fire-resistance-rated walls, ceilings and shafts during a fire emergency. Sections 703.4.2 and 703.4.3 of this code indicate specific points of inspection and enforcement regarding these doors. Prohibited modifications to fire door assemblies include the attachment of materials, cutting, boring holes or other alterations that could affect the performance of the door as a fire protection-rated assembly.

This section also addresses the very real issue of maintaining labeled opening protectives by requiring field-applied labels to follow the requirements of the third-party certification organization, which is accredited for listing the specific opening protective. The relabeling of existing fire doors is a common practice and, due to the importance of the rating requirements, a level of monitoring by a third party to ensure the labeling matches the rating of the door assembly is necessary.

In the listing documentation, there are specific criteria for field application of labels. One of the criteria is whether the local fire code official allows this practice, and this section provides guidance in this area to the fire code official. IBC Section 716.2.9.1 requires that new fire doors or new fire door assemblies must be labeled at the factory (see the definition of "Labeled" in Chapter 2 of this code). However, it is not uncommon for an existing fire door to have either a damaged or missing label, or a label that has been painted over or otherwise obscured. The fire code official needs to make a determination as to whether field application of the label is acceptable. If field application is allowed, then the certification organization can follow the proper criteria for labeling the opening protective.

Proper maintenance necessitates that the manufacturer's installation instructions and the listing organization's instructions are followed in order to maintain the listing and proper operation of the assemblies and devices as required by the code, the manufacturer and the listing organization.

INTERNATIONAL CODE COUNCIL®
Copyright © 2018 ICC. ALL RIGHTS RESERVED. Accessed by Jim Davis (JDavis@ShakopeeMN.gov), (City of Shakopee) Order Number #101054067 on Mar 17, 2021 01:42 PM (PDT) pursuant to License Agreement with ICC. No further reproduction, no further reproductions by any third party, or distribution authorized. Single user only, copying and networking prohibited. ANY UNAUTHORIZED REPRODUCTION OR DISTRIBUTION IS A VIOLATION OF THE FEDERAL COPYRIGHT ACT AND THE LICENSE AGREEMENT, AND SUBJECT TO CIVIL AND CRIMINAL PENALTIES THEREUNDER.

101054067

[F] 703.4.1 Signs. Where required by the code official, a sign shall be permanently displayed on or near each fire door in letters not less than 1 inch (25 mm) high to read as follows:

1. For doors designed to be kept normally open: FIRE DOOR – DO NOT BLOCK.
2. For doors designed to be kept normally closed: FIRE DOOR – KEEP CLOSED.

❖ Any door in a fire-resistance-rated wall assembly represents a potential "weak link" in maintaining the degree of compartmentation intended by the code. That is the reason for requiring a rated assembly. The IBC calls for adequate opening protection in the form of a door with a specified fire protection rating. This section allows the code official to require signage on or near the rated doors to make the occupants aware of the importance of the door as a fire- and life-safety feature. Also, see the commentary to Section 703.4.2 for a discussion on door closing and the improper use of props to hold doors open.

[F] 703.4.2 Hold-open devices and closers. Hold-open devices and automatic door closers shall be maintained. During the period that such a device is out of service for repairs, the door it operates shall remain in the closed position.

❖ The only devices acceptable for holding fire doors open are fire-detector-activated automatic-closing devices that automatically close the doors (or allow the doors to swing closed using self-closing devices) in the event of a fire. Numerous devices, such as electromagnetic hold-opens, pneumatic systems and systems of pulleys and weights connected to a fusible link, are available.

The detection method for the closing device must be consistent with the purpose of the opening protective; that is, doors in smoke barriers must be activated by smoke detectors. Heat detectors or fusible links are adequate where maintenance of the fire-resistance rating alone is required.

Where smoke-detector-activated automatic door closers are used and the detectors are interconnected with a required fire alarm system, the devices and wiring methods must be checked for compatibility with the fire alarm system control panel before installation. Some fire alarm control equipment is compatible only with the manufacturer's automatic smoke detectors.

Wooden wedges, rubber wedges and kick-down-type doorstops are common violations of basic safety principles and this section of the code. Doorstops render fire doors and smoke barrier doors totally ineffective as opening protectives. Building maintenance personnel who do not understand the purpose of these doors often use doorstops to aid movement of people, equipment or air in a hallway or other area without realizing the potential hazard to life safety if a fire were to occur. This violation is especially problematic as it pertains to means of egress stairwells or horizontal exit doors. For further information on door closing requirements for fire doors, see Section 716.2.6.1 of the IBC.

[F] 703.4.3 Door operation. Swinging fire doors shall close from the full-open position and latch automatically. The door closer shall exert enough force to close and latch the door from any partially open position.

❖ Fire doors must be closed to be effective. Swinging fire doors should be frequently checked to make sure they close and latch on their own power from any position.

[F] 703.5 Ceilings. The hanging and displaying of salable goods and other decorative materials from acoustical ceiling systems that are part of a fire-resistance-rated horizontal assembly shall be prohibited.

❖ This section is only applicable to acoustical ceiling systems that are a component of an approved fire-resistance-rated floor/ceiling or roof/ceiling assembly required to be rated by the type of construction of the building. Fire-resistance-rated floor/ceiling and roof/ceiling assemblies must be tested using the methods in ASTM E119 to demonstrate a fire-resistance rating. Locating a substantial fuel load and additional weight directly beneath an acoustical ceiling, however, may expose the ceiling to a direct fire source and weight overload not contemplated in the ASTM E119 testing. Such exposure could breach the ceiling, which is an integral part of the tested assembly. Depending on the contribution of the ceiling to the overall fire-resistance rating, this may result in the assembly not functioning as the code intends or failing completely.

New acoustical ceiling systems, whether or not they are a component of an approved fire-resistance-rated assembly, are required to comply with Section 808 of the IBC. Section 808.1.1 of the IBC requires that acoustical ceiling systems comply with the manufacturer's installation instructions. Section 808.1.1.1 of the IBC further requires compliance with several ASTM standards that govern the installation of such systems. Those standards do not contemplate the addition of loads to the metal support framework of the system beyond the load of the system itself plus light fixtures, or other components that might be part of the approved design. Adding any weight to the system beyond that which it was designed for and approved by the building official could lead to failure of the system and should only be done after a review of the structural components by a registered design professional.

[F] 703.6 Testing. Horizontal and vertical sliding and rolling fire doors shall be inspected and tested annually to confirm operation and full closure. Records of inspections and testing shall be maintained.

❖ Annual tests are intended to determine whether required fire doors operate freely and close completely. Where fusible links are used as the releasing

INTERNATIONAL CODE COUNCIL®
Copyright © 2018 ICC. ALL RIGHTS RESERVED. Accessed by Jim Davis (JDavis@ShakopeeMN.gov), (City of Shakopee) Order Number #101054067 on Mar 17, 2021 01:42 PM (PDT) pursuant to License Agreement with ICC. No further reproduction, no further reproductions by any third party, or distribution authorized. Single user only, copying and networking prohibited. ANY UNAUTHORIZED REPRODUCTION OR DISTRIBUTION IS A VIOLATION OF THE FEDERAL COPYRIGHT ACT AND THE LICENSE AGREEMENT, AND SUBJECT TO CIVIL AND CRIMINAL PENALTIES THEREUNDER.

101054067

mechanism, the link may be temporarily removed rather than activated during testing. Fusible links in poor condition must be replaced as part of the maintenance of fire-resistance components. Smoke detectors and heat detectors other than fusible links must be tested as required by the manufacturer's instructions (see NFPA 72 for recommended testing procedures for various fire detectors).

This section also requires that written records of inspection and testing of opening protectives must be kept and should indicate the date, the time and the name of the person conducting the inspection or repair for each rated assembly. These records must be maintained by the owner and should be made available to the fire code official for review when requested. This requirement relieves the code official of the administrative burden of maintaining test records.

[F] 703.7 Vertical shafts. Interior vertical shafts, including stairways, elevator hoistways and service and utility shafts, which connect two or more stories of a building shall be enclosed or protected as required in Chapter 11 of the *International Fire Code*. New floor openings in existing buildings shall comply with the *International Building Code*.

❖ Vertical openings that are not properly protected can act as a chimney for smoke, hot gases and products of combustion. Unprotected floor openings have been a major contributing factor in many large loss-of-life fires. Unless indicated otherwise, Chapter 11 of the IFC retroactively requires the enclosure of vertical openings between floors with approved fire barriers. See the commentary to Sections 1103.4 through 1103.4.10 of the IFC.

[F] 703.8 Opening protective closers. Where openings are required to be protected, opening protectives shall be maintained self-closing or automatic-closing by smoke detection. Existing fusible-link-type automatic door-closing devices shall be replaced if the fusible link rating exceeds 135°F (57°C).

❖ This section requires that fire door assemblies provided for protecting openings in vertical enclosures be self-closing or automatic-closing in order to maintain the integrity of the vertical opening enclosure. This section also recognizes that some opening protectives in existing buildings may already be equipped with heat-actuated closing devices rather than the smoke-detector-actuated devices otherwise required by the section. Such devices are allowed to continue in service, provided that the temperature rating of their fusible element is as low as is available [i.e., 135°F (57°C)] to provide the fastest possible operation in the event of a fire. In the event that an existing fusible link on an opening protective is rated higher than the maximum 135°F (57°C) allowed by this section, it would need to be removed and the door maintained as self-closing or be replaced with a smoke-detector-actuated closer in accordance with this section and Section 907.3 if the IBC. New opening protectives must comply with Section 716 of the IBC. See the commentary to that section for further information.

SECTION 704
FIRE PROTECTION SYSTEMS

[F] 704.1 Inspection, testing and maintenance. Fire detection, alarm and extinguishing systems, mechanical smoke exhaust systems, and smoke and heat vents shall be maintained in accordance with the *International Fire Code* in an operative condition at all times, and shall be replaced or repaired where defective.

❖ Adequate maintenance, inspection and periodic testing of all fire protection systems, equipment and devices, including equipment and systems related to mechanical smoke exhaust and smoke and heat vents, is necessary so that the systems are ready to perform their intended functions should fire occur.

An inspection consists of a visual check of a system or device to verify that it is in operating condition and free from defects or damage. Indicating valves, gauges and indicator lamps are a few of the features required by the codes to facilitate this activity. Obvious damage and the general condition of the system, particularly the presence of corrosion, both external and internal, must always be noted and recorded. Partially because they are less detailed, inspections are conducted more frequently than tests and maintenance. Because special knowledge and tools are not required, inspections may be performed by any reasonably competent person.

Periodic tests following standardized methods are intended to confirm the results of inspections, determine that all components function properly and that systems meet their original design specifications. Tools, devices or equipment are usually required for these tests.

Because tests are more detailed than inspections, they are usually conducted only once or twice per year in most cases. Some tests, however, may be required as frequently as bimonthly or quarterly (for example, some fire alarm system equipment) or as infrequently as 5-, 6- or 12-year intervals (for example, portable fire-extinguisher hydrostatic tests). Since specialized knowledge and equipment are required, testing is usually done by technicians or specialists trained in the proper conduct of the test methods involved.

Periodic maintenance keeps systems in good working order and may be used to repair damage or defects discovered during inspections or testing. Specialized tools and training are required to perform maintenance. Only properly trained technicians or specialists should perform required periodic maintenance. Most maintenance is required only as needed, but many manufacturers suggest or require regular periodic replacement of parts subject to wear or abuse.

INTERNATIONAL CODE COUNCIL®
Copyright © 2018 ICC. ALL RIGHTS RESERVED. Accessed by Jim Davis (JDavis@ShakopeeMN.gov), (City of Shakopee) Order Number #101054067 on Mar 17, 2021 01:42 PM (PDT) pursuant to License Agreement with ICC. No further reproduction, no further reproductions by any third party, or distribution authorized. Single user only, copying and networking prohibited. ANY UNAUTHORIZED REPRODUCTION OR DISTRIBUTION IS A VIOLATION OF THE FEDERAL COPYRIGHT ACT AND THE LICENSE AGREEMENT, AND SUBJECT TO CIVIL AND CRIMINAL PENALTIES THEREUNDER.

101054067

[F] 704.1.1 Installation. Fire protection systems shall be maintained in accordance with the original installation standards for that system. Required systems shall be extended, altered or augmented as necessary to maintain and continue protection where the building is altered or enlarged. Alterations to fire protection systems shall be done in accordance with applicable standards.

❖ This section emphasizes that systems installed and maintained in compliance with the codes and standards in effect at the time they were placed in service must remain operational at all times. The code does not require existing systems that are otherwise not being altered to comply with current code and standard requirements. An existing system, even if it does not meet current standards, is allowed to continue in service as long as it continues to provide no less quality in service than what was originally in place. Hence, if an alteration or expansion of the system is proposed, the key is whether or not the level of protection afforded by the system is the same or greater than it was before the alteration or expansion was considered. Any added sections of the system must meet the requirements for new fire protection according to the system involved.

[F] 704.1.2 Required fire protection systems. Fire protection systems required by this code, the *International Fire Code* or the *International Building Code* shall be installed, repaired, operated, tested and maintained in accordance with this code. A fire protection system for which a design option, exception or reduction to the provisions of this code, the *International Fire Code* or the *International Building Code* has been granted shall be considered to be a required system.

❖ Fire protection systems that are required by Chapter 9 or by another section of either the IBC or IFC must be considered as required systems. The fire protection system is an integral component of the protection features of the building and must be properly installed, repaired, operated, tested and maintained in accordance with the code. Improperly installed or maintained systems can fail to provide the anticipated protection and, in some cases, create a hazard.

Although the code may not require a fire protection system for a specific building or portion of a building because of its occupancy, the fire protection system would still be considered a required system if some other code alternative, exception or reduction was taken based on the installation of that fire protection system. For example, a typical small office building may not require an automatic sprinkler system solely because of its Group B occupancy classification. However, if an exit access corridor fire-resistance-rating reduction is taken as allowed by Table 1020.1 for buildings equipped throughout with an NFPA 13 sprinkler system, that sprinkler system is now considered a required system. Code tradeoffs, exceptions, reductions or other design options are not unique to the IBC. Such tradeoffs occur more than 60 times in the code.

[F] 704.1.3 Fire protection systems. Fire protection systems shall be inspected, maintained and tested in accordance with the following *International Fire Code* requirements.

1. Automatic sprinkler systems, see Section 903.5.
2. Automatic fire-extinguishing systems protecting commercial cooking systems, see Section 904.12.5.
3. Automatic water mist extinguishing systems, see Section 904.11.
4. Carbon dioxide extinguishing systems, see Section 904.8.
5. Carbon monoxide alarms and carbon monoxide detection systems, see Section 915.6.
6. Clean-agent extinguishing systems, see Section 904.10.
7. Dry-chemical extinguishing systems, see Section 904.6.
8. Fire alarm and fire detection systems, see Section 907.8.
9. Fire department connections, see Sections 912.4 and 912.7.
10. Fire pumps, see Section 913.5.
11. Foam extinguishing systems, see Section 904.7.
12. Halon extinguishing systems, see Section 904.9.
13. Single- and multiple-station smoke alarms, see Section 907.10.
14. Smoke and heat vents and mechanical smoke removal systems, see Section 910.5.
15. Smoke control systems, see Section 909.20.
16. Wet-chemical extinguishing systems, see Section 904.5.

❖ This section simply points the user of the code to the fire protection provisions of the IFC that must be maintained in accordance with this code.

[F] 704.2 Standards. Fire protection systems shall be inspected, tested and maintained in accordance with the referenced standards listed in Table 704.2 and as required in this section.

❖ Specific requirements related to inspection practices, testing schedules and maintenance procedures are dependent on the type of fire protection system and its corresponding referenced NFPA standard as indicated in Table 901.6.1.

INTERNATIONAL CODE COUNCIL®
Copyright © 2018 ICC. ALL RIGHTS RESERVED. Accessed by Jim Davis (JDavis@ShakopeeMN.gov), (City of Shakopee) Order Number #101054067 on Mar 17, 2021 01:42 PM (PDT) pursuant to License Agreement with ICC. No further reproduction, no further reproductions by any third party, or distribution authorized. Single user only, copying and networking prohibited. ANY UNAUTHORIZED REPRODUCTION OR DISTRIBUTION IS A VIOLATION OF THE FEDERAL COPYRIGHT ACT AND THE LICENSE AGREEMENT, AND SUBJECT TO CIVIL AND CRIMINAL PENALTIES THEREUNDER.

101054067

TABLE 704.2
FIRE PROTECTION SYSTEM MAINTENANCE STANDARDS

SYSTEM	STANDARD
Portable fire extinguishers	NFPA 10
Carbon dioxide fire-extinguishing system	NFPA 12
Halon 1301 fire-extinguishing systems	NFPA 12A
Dry-chemical extinguishing systems	NFPA 17
Wet-chemical extinguishing systems	NFPA 17A
Water-based fire protection systems	NFPA 25
Fire alarm systems	NFPA 72
Smoke and heat vents	NFPA 204
Water-mist systems	NFPA 750
Clean-agent extinguishing systems	NFPA 2001

❖ Table 704.2 lists the NFPA referenced standards to be used for the inspection, testing and maintenance criteria for various fire protection systems. Many of the testing and maintenance requirements are included elsewhere in Chapter 9 of the code.

[F] 704.2.1 Records. Records shall be maintained of all system inspections, tests and maintenance required by the referenced standards.

❖ Accurate, up-to-date records are required to document the history of system inspection, testing and maintenance. Record keeping is not intended simply to prove to the code official that required inspection, testing and maintenance are being performed, but to assist the owner or his or her agent in performing these functions. A well-kept log helps an owner or technician determine how the system is performing over time and how changes inside and outside of the protected premises are affecting system performance. For example, automatic sprinkler system main drain test results may indicate whether the public water supply is being degraded by development, thereby impairing sprinkler system capabilities. Similarly, a history of accidental alarms at a specific smoke detector may indicate that the device requires cleaning or maintenance.

[F] 704.2.2 Records information. Initial records shall include the: name of the installation contractor; type of components installed; manufacturer of the components; location and number of components installed per floor; and manufacturers' operation and maintenance instruction manuals. Such records shall be maintained for the life of the installation.

❖ When fire protection systems are first installed, an accurate inventory must be compiled so that future owners and officials can refer back to the documents for maintenance and operational requirements. Additionally, if a recall is required, the installation inventory will be able to identify if any of the components subject to the recall are installed. By including the installation contractor's information in the list, a resolution of any legal aspects of defective components can be more readily obtained. Also, if operations or maintenance change during the life of the installation and a public notice is provided, the building owner will have the information necessary to know and apply the new requirements. The requirement to collect and maintain this information is already within many of the standards referenced in the code. This requirement gives the code official enforcement language and assists the building owner in understanding the responsibilities associated with having these fire protection systems installed in the building.

[F] 704.3 Systems out of service. Where a required fire protection system is out of service, the fire department and the fire code official shall be notified immediately and, where required by the fire code official, either the building shall be evacuated or an approved fire watch shall be provided for all occupants left unprotected by the shutdown until the fire protection system has been returned to service. Where utilized, fire watches shall be provided with not less than one approved means for notification of the fire department and shall not have duties beyond performing constant patrols of the protected premises and keeping watch for fires. Actions shall be taken in accordance with Section 901 of the *International Fire Code* to bring the systems back in service.

❖ The protection afforded by a required fire protection system must not be diminished in any existing building except for the purpose of conducting tests, maintenance or repairs. The length of service interruptions must be kept to a minimum. The fire department and the fire code official must be notified of any service interruptions. They must carefully evaluate the continued operation or occupancy of buildings and structures where protection is interrupted. Whenever possible, all unaffected portions of the system should be kept in service. Until protection is restored, hazardous processes or operations should be suspended and alternative special protection should be considered in addition to an approved fire watch.

The code text only addresses when a required system is placed out of service. However, if a system is in place, even though it is not required by the code or the IBC, it would be an appropriate courtesy to inform the fire department of any fire protection system being discontinued or temporarily taken out of service. If the nonrequired system is to be placed out of service for an extended period of time, the code official has the authority to address the condition under Section 901.4.5 of the IFC and require that the system be either placed back into operation or removed so as not to create a false impression of protection.

[F] 704.3.1 Emergency impairments. Where unplanned impairments of fire protection systems occur, appropriate emergency action shall be taken to minimize potential injury and damage. The impairment coordinator shall implement the steps outlined in Section 901.7.4 of the *International Fire Code*.

❖ Unplanned impairments, of course, go beyond typical testing and maintenance procedures but are also not necessarily indicative of a fire event. For example, an unplanned emergency impairment might occur if a

INTERNATIONAL CODE COUNCIL®
Copyright © 2018 ICC. ALL RIGHTS RESERVED. Accessed by Jim Davis (JDavis@ShakopeeMN.gov), (City of Shakopee) Order Number #101054067 on Mar 17, 2021 01:42 PM (PDT) pursuant to License Agreement with ICC. No further reproduction, no further reproductions by any third party, or distribution authorized. Single user only, copying and networking prohibited. ANY UNAUTHORIZED REPRODUCTION OR DISTRIBUTION IS A VIOLATION OF THE FEDERAL COPYRIGHT ACT AND THE LICENSE AGREEMENT, AND SUBJECT TO CIVIL AND CRIMINAL PENALTIES THEREUNDER.

101054067

sprinkler head or pipe was found leaking or was accidentally impacted by a fork-lift truck. To reduce water damage and to repair the sprinkler system, the valve controlling the water supply to the affected area would need to be closed, thereby impairing protection to the area protected by that portion of the sprinkler system. The impairment coordinator must follow the procedures in Section 901.7.4 of the IFC to restore protection in minimum time.

[F] 704.4 Removal of or tampering with equipment. It shall be unlawful for any person to remove, tamper with or otherwise disturb any fire hydrant, fire detection and alarm system, fire suppression system or other fire appliance required by this code except for the purposes of extinguishing fire, training, recharging or making necessary repairs.

❖ Tampering with or unauthorized alteration of any fire protection system or component is illegal. A person who unlawfully tampers with equipment could face potential criminal charges. Tampering could include intentionally pulling a manual fire alarm box when no emergency exists, playing with matches to set off a smoke detector or flowing a city fire hydrant. The use of fire protection systems, equipment and other fire appliances is limited to those people authorized to conduct repairs and maintenance unless approved by the code official.

[F] 704.4.1 Removal of or tampering with appurtenances. Locks, gates, doors, barricades, chains, enclosures, signs, tags and seals that have been installed by or at the direction of the fire code official shall not be removed, unlocked, destroyed or tampered with in any manner.

❖ Removing or vandalizing appurtenances that are in place to prevent tampering with the system components is also prohibited. For example, sprinkler system control valves are routinely chained and locked in the open position in addition to being equipped with electronically monitored tamper switches. Gates at fire apparatus roads, authorized by Section 503.6 must not have the locks changed or operation altered unless approved by the fire code official. Any unauthorized removal or tampering with these types of devices is strictly prohibited.

[F] 704.4.2 Removal of existing occupant-use hose lines. The fire code official is authorized to permit the removal of existing occupant-use hose lines where all of the following apply:

1. The installation is not required by the *International Fire Code* or the *International Building Code*.
2. The hose line would not be utilized by trained personnel or the fire department.
3. The remaining outlets are compatible with local fire department fittings.

❖ The current IFC and IBC do not require occupant-use hoses in as many locations as were required in previous editions of the codes and referenced standards. There also has been a shift in the philosophy of fire service leaders as to whether occupants should attempt to extinguish the fire via occupant-use hose stations or evacuate the structure. Most of the population is now being taught to evacuate the building, not to fight the fire. This shift is mainly due to the safety risk of having an untrained person attempting to fight a fire with more than a fire extinguisher. Another consideration was the ongoing cost to building owners to comply with maintenance and testing requirements for the hoses and their racks. Many jurisdictions have enacted local legislation or code changes to address this issue, and the addition of this new section updates the code to reflect conventional wisdom on this topic. This section provides safeguards in the form of several conditions for the fire code official to consider in formulating an approval for removal of occupant-use hoses. The first condition makes common sense where a new building of the same characteristics would not be required to have hose stations installed. The second condition assumes there is not a fire brigade on the premises trained to use the hose stations as first responders in, for example, an industrial setting. Condition 2 also recognizes that fire departments typically will not use private hose stations for fire attack due to the questionable quality of their maintenance. Condition 3 was included to ensure that any remaining outlets are useable by the fire department by requiring that their threads be compatible with local fire department fire hose fittings, such as American National Fire Hose Connection Screw Thread (NH).

[F] 704.4.3 Termination of monitoring service. For fire alarm systems required to be monitored by the *International Fire Code*, notice shall be made to the fire code official whenever alarm monitoring services are terminated. Notice shall be made in writing by the provider of the monitoring service being terminated.

❖ This section requires the monitoring service itself to notify the fire code official of service being terminated. Although the ultimate responsibility rests with the building owner, he or she is not cited in this section since if they discontinued the service, they would likely not understand the implications, and if they did would have no incentive to contact the fire code official.

[F] 704.5 Fire department connection. Where the fire department connection is not visible to approaching fire apparatus, the fire department connection shall be indicated by an *approved* sign mounted on the street front or on the side of the building. Such sign shall have the letters "FDC" not less than 6 inches (152 mm) high and words in letters not less than 2 inches (51 mm) high or an arrow to indicate the location. Such signs shall be subject to the approval of the fire code official.

❖ The section acknowledges that fire department connections (FDCs) on existing buildings are not always readily visible from the street or nearest point of fire department vehicle access. In those instances, the location of the connection must be clearly marked with signage. The FDC may be located on the side of

INTERNATIONAL CODE COUNCIL®
Copyright © 2018 ICC. ALL RIGHTS RESERVED. Accessed by Jim Davis (JDavis@ShakopeeMN.gov), (City of Shakopee) Order Number #101054067 on Mar 17, 2021 01:42 PM (PDT) pursuant to License Agreement with ICC. No further reproduction, no further reproductions by any third party, or distribution authorized. Single user only, copying and networking prohibited. ANY UNAUTHORIZED REPRODUCTION OR DISTRIBUTION IS A VIOLATION OF THE FEDERAL COPYRIGHT ACT AND THE LICENSE AGREEMENT, AND SUBJECT TO CIVIL AND CRIMINAL PENALTIES THEREUNDER.

101054067

the building or in an alley, not visible to arriving fire-fighting forces. A sign is necessary so that those driving the arriving apparatus know where to maneuver the vehicle to get close to the FDC. This language is also found in Section 912.2.2 of the IBC.

[F] 704.5.1 Fire department connection access. Ready access to fire department connections shall be maintained at all times and without obstruction by fences, bushes, trees, walls or any other fixed or movable object. Access to fire department connections shall be approved by the fire chief.

Exception: Fences, where provided with an access gate equipped with a sign complying with the legend requirements of Section 912.5 of the *International Fire Code* and a means of emergency operation. The gate and the means of emergency operation shall be approved by the fire chief and maintained operational at all times.

❖ The FDC must be readily accessible to fire fighters and allow fire-fighting personnel an adequate area to maneuver a hose for the connection. Landscaping design must not block a clear view of the FDC from arriving fire department vehicles. Depending on the type of landscaping materials, an active maintenance program may be necessary to maintain ready access over time. This section also recognizes that the obstructing objects regulated here can be either fixed or movable (outdoor furnishings, shopping cart queue areas, etc.). Note that no specific dimension is given. This performance language avoids previous misinterpretations that the code intended to allow obstructions to FDC access as long as they were kept 3 feet (914 mm) away. Since fireground operations are based on local operational procedures, it is only reasonable that the fire chief of the jurisdiction have final approval authority over the access to the FDC.

The exception recognizes the practical fact that sometimes, security or other considerations make installation of a fence around a building necessary as long as the fence meets the stated criteria. The sign requirement is intended to provide a visual location cue to approaching fire apparatus where the height of the fence may obscure the visibility of the FDC.

[F] 704.5.2 Clear space around connections. A working space of not less than 36 inches (914 mm) in width, 36 inches (914 mm) in depth and 78 inches (1981 mm) in height shall be provided and maintained in front of and to the sides of wall-mounted fire department connections and around the circumference of free-standing fire department connections.

❖ Care must be taken so that fences, utility poles, barricades and other obstructions do not prevent access to and use of FDCs. A clear space of 3 feet (914 mm) must be maintained in front of and to either side of wall-mounted FDCs and around free-standing FDCs to allow easy hose connections to the fitting and efficient use of spanner wrenches and other tools needed by the apparatus engineer.

Though not specifically mentioned in this section, it is also important that FDCs be installed with the hose connections well above adjoining grade to accommodate the free turning of a spanner wrench when connecting hoses to the FDC.

[F] 704.6 Single- and multiple-station smoke alarms. Single- and multiple-station smoke alarms shall be installed in existing Group I-1 and R occupancies in accordance with Sections 704.6.1 through 704.6.3.

❖ This section introduces the requirements for the installation of smoke alarms in existing Group I-1 and R occupancies. These requirements recognize the benefit of installing smoke alarms in existing structures, but provide several exceptions for buildings that are not undergoing substantial renovations. These provisions also correlate with Section 704.2 for single- or multiple-station smoke alarm requirements for existing Group R dwellings.

[F] 704.6.1 Where required. Existing Group I-1 and R occupancies shall be provided with single-station smoke alarms in accordance with Sections 704.6.1.1 through 704.6.1.4. Interconnection and power sources shall be in accordance with Sections 704.6.2 and 704.6.3.

Exceptions:

1. Where the code that was in effect at the time of construction required smoke alarms and smoke alarms complying with those requirements are already provided.
2. Where smoke alarms have been installed in occupancies and dwellings that were not required to have them at the time of construction, additional smoke alarms shall not be required provided that the existing smoke alarms comply with requirements that were in effect at the time of installation.
3. Where smoke detectors connected to a fire alarm system have been installed as a substitute for smoke alarms.

❖ This section requires that Group I-1 and R occupancies without smoke alarms be provided with single-station smoke alarms. Reference is made to Sections 704.6.1.1 through 704.6.1.4 for the primary location requirements. Three exceptions are also provided to address possible scenarios where smoke alarms have already been installed but the installation does not meet the current code requirements. These exceptions recognize the code permits existing smoke alarm installations to continue unchanged where they meet the code that was in effect at the time they were installed.

Exception 1 indicates that smoke alarms which have been installed and maintained in accordance with the applicable code at the time of construction can continue unchanged. Exception 2 indicates that smoke alarms, which were not required by the code at the time of construction, but were later installed, can continue where they meet the requirements of the applicable code at the time of installation. Exception 3 indicates that smoke detectors connected to a fire alarm system may be used in lieu of smoke alarms.

INTERNATIONAL CODE COUNCIL®
Copyright © 2018 ICC. ALL RIGHTS RESERVED. Accessed by Jim Davis (JDavis@ShakopeeMN.gov), (City of Shakopee) Order Number #101054067 on Mar 17, 2021 01:42 PM (PDT) pursuant to License Agreement with ICC. No further reproduction, no further reproductions by any third party, or distribution authorized. Single user only, copying and networking prohibited. ANY UNAUTHORIZED REPRODUCTION OR DISTRIBUTION IS A VIOLATION OF THE FEDERAL COPYRIGHT ACT AND THE LICENSE AGREEMENT, AND SUBJECT TO CIVIL AND CRIMINAL PENALTIES THEREUNDER.

101054067

In summary, this section requires the installation of smoke alarms in Group I-1 and R occupancies that do not currently have any smoke alarms. It does not mandate compliance with current smoke alarm requirements if the building already has smoke alarms meeting the requirements applicable when they were installed. The focus here is not to have the owner replace or revise his or her smoke alarms any time the code requirements for new construction change.

[F] 704.6.1.1 Group R-1. Single- or multiple-station smoke alarms shall be installed in all of the following locations in Group R-1:

1. In sleeping areas.
2. In every room in the path of the *means of egress* from the sleeping area to the door leading from the *sleeping unit*.
3. In each story within the *sleeping unit*, including basements. For *sleeping units* with split levels and without an intervening door between the adjacent levels, a smoke alarm installed on the upper level shall suffice for the adjacent lower level provided that the lower level is less than one full story below the upper level.

❖ Because the occupants of a sleeping unit or suite may be asleep and unaware of a fire developing in the room or in the egress path, single- or multiple-station smoke alarms must be provided in the sleeping unit and in any intervening room between the sleeping unit and the exit access door from the room. If the sleeping unit or suite involves more than one level, a smoke alarm must also be installed on every level. See the commentary to Section 202 definition of "Sleeping unit."

Smoke alarms are required in split-level arrangements, except those that meet the conditions described in Item 3. In accordance with Section 704.6.2, all smoke alarms within a sleeping unit or suite must be interconnected so that actuation of one alarm will actuate the alarms in all smoke alarms within the sleeping unit or suite.

[F] 704.6.1.2 Groups R-2, R-3, R-4 and I-1. Single- or multiple-station smoke alarms shall be installed and maintained in Groups R-2, R-3, R-4 and I-1 regardless of *occupant load* at all of the following locations:

1. On the ceiling or wall outside of each separate sleeping area in the immediate vicinity of bedrooms.
2. In each room used for sleeping purposes.
3. In each story within a *dwelling unit*, including *basements* but not including crawl spaces and uninhabitable attics. In *dwellings* or *dwelling units* with split levels and without an intervening door between the adjacent levels, a smoke alarm installed on the upper level shall suffice for the adjacent lower level provided that the lower level is less than one full story below the upper level.

❖ Because the occupants of a dwelling unit may be asleep and unaware of a fire developing in the room or in an area within the dwelling unit that will affect their ability to escape, single- or multiple-station smoke alarms must be installed in every bedroom, in the vicinity of all bedrooms (e.g., hallways leading to the bedrooms) and on each story of the dwelling unit (see the commentary to Section 202 for the definition of "Dwelling unit").

If a sprinkler system was installed throughout the building in accordance with NFPA 13, 13R or 13D, if applicable, smoke alarms would still be required in the bedrooms even if residential sprinklers were used.

Smoke alarms are required in split-level arrangements. As required by Section 704.6.2, all smoke alarms within a dwelling unit must be interconnected so that actuation of one alarm will actuate the alarms in all detectors within the dwelling unit.

These provisions do not apply to one- and two-family dwellings and multiple single-family dwellings (townhouses) not more than three stories in height with a separate means of egress that are regulated by the IRC. The IRC is intended to be a stand-alone document, but, if the residential units do not fall within the scope of the IRC or for other reasons are intended to be subject to this code, the requirements of this section would apply. IFC Committee Interpretation No. 42-03 addresses this condition and contains additional explanatory information about the IRC and its relationship to the other *International Codes*.

Although the occupants of a sleeping unit in a Group I-1 occupancy may be asleep, they are still considered capable of self-preservation. Regardless, smoke alarms are required in sleeping units.

[F] 704.6.1.3 Installation near cooking appliances. Smoke alarms shall not be installed in the following locations unless this would prevent placement of a smoke alarm in a location required by Section 704.6.1.1 or 704.6.1.2.

1. Ionization smoke alarms shall not be installed less than 20 feet (6096 m) horizontally from a permanently installed cooking appliance.
2. Ionization smoke alarms with an alarm-silencing switch shall not be installed less than 10 feet (3048 mm) horizontally from a permanently installed cooking appliance.
3. Photoelectric smoke alarms shall not be installed less than 6 feet (1829 mm) horizontally from a permanently installed cooking appliance.

❖ This section and the following section are intended to reduce nuisance alarms attributed to locating smoke alarms in close proximity to cooking appliances and bathrooms in which steam is produced. The provisions are consistent with similar requirements included in Section 29.8.3.4 of the 2010 and 2013 editions of NFPA 72.

[F] 704.6.1.4 Installation near bathrooms. Smoke alarms shall be installed not less than 3 feet (914 mm) horizontally from the door or opening of a bathroom that contains a bath-

INTERNATIONAL CODE COUNCIL®
Copyright © 2018 ICC. ALL RIGHTS RESERVED. Accessed by Jim Davis (JDavis@ShakopeeMN.gov), (City of Shakopee) Order Number #101054067 on Mar 17, 2021 01:42 PM (PDT) pursuant to License Agreement with ICC. No further reproduction, no further reproductions by any third party, or distribution authorized. Single user only, copying and networking prohibited. ANY UNAUTHORIZED REPRODUCTION OR DISTRIBUTION IS A VIOLATION OF THE FEDERAL COPYRIGHT ACT AND THE LICENSE AGREEMENT, AND SUBJECT TO CIVIL AND CRIMINAL PENALTIES THEREUNDER.

101054067

tub or shower unless this would prevent placement of a smoke alarm required by Section 704.6.1.1 or 704.6.1.2.

❖ See the commentary to Section 704.6.1.3.

[F] 704.6.2 Interconnection. Where more than one smoke alarm is required to be installed within an individual *dwelling* or *sleeping unit*, the smoke alarms shall be interconnected in such a manner that the activation of one alarm will activate all of the alarms in the individual unit. Physical interconnection of smoke alarms shall not be required where listed wireless alarms are installed and all alarms sound upon activation of one alarm. The alarm shall be clearly audible in all bedrooms over background noise levels with all intervening doors closed.

Exceptions:

1. Interconnection is not required in buildings that are not undergoing *alterations*, repairs or construction of any kind.
2. Smoke alarms in existing areas are not required to be interconnected where *alterations* or repairs do not result in the removal of interior wall or ceiling finishes exposing the structure, unless there is an attic, crawl space or basement available that could provide access for interconnection without the removal of interior finishes.

❖ The installation of smoke alarms in areas remote from the sleeping area will be of minimal value if the alarm is not heard by the occupants. Interconnection of multiple smoke alarms within an individual dwelling unit or sleeping unit is required in order to alert a sleeping occupant of a remote fire within the unit before the combustion products reach the smoke alarm in the sleeping area and thus provide additional time for evacuation.

The term "interconnection" refers to either hardwired systems or listed wireless systems. UL has listed smoke detectors that use this technology. It is presumed that on safely evacuating the unit or room of fire origin, an occupant will notify other occupants by actuating the manual fire alarm system or using other available means.

Exception 1 exempts buildings that are not undergoing any new work (alterations, additions, repairs, etc.) from providing interconnection between smoke alarms. This is to recognize that interconnection could require removal and replacement of interior finishes.

Exception 2 exempts areas of buildings that are not being altered or repaired to result in the removal of interior finishes. Where interior finishes are being removed, interconnection is required.

[F] 704.6.3 Power source. Single-station smoke alarms shall receive their primary power from the building wiring provided that such wiring is served from a commercial source and shall be equipped with a battery backup. Smoke alarms with integral strobes that are not equipped with battery backup shall be connected to an emergency electrical system. Smoke alarms shall emit a signal when the batteries are low. Wiring shall be permanent and without a disconnecting switch other than as required for overcurrent protection.

Exceptions:

1. Smoke alarms are permitted to be solely battery operated in existing buildings where construction is not taking place.
2. Smoke alarms are permitted to be solely battery operated in buildings that are not served from a commercial power source.
3. Smoke alarms are permitted to be solely battery operated in existing areas of buildings undergoing *alterations* or repairs that do not result in the removal of interior walls or ceiling finishes exposing the structure, unless there is an attic, crawl space or *basement* available that could provide access for building wiring without the removal of interior finishes.

❖ Smoke alarms are required to use AC as a primary power source and battery power as a secondary source to improve their reliability. For example, during a power outage, the probability of fire is increased because of the use of candles or lanterns for temporary light. Required backup battery power is intended to provide continued functioning of the smoke alarms. Smoke alarms are commonly designed to emit a recurring signal when batteries are low and need to be replaced.

Certain occupancies may already have an emergency electrical system in the building to monitor other building system conditions. The emergency electrical system provides a level of reliability equivalent to battery backup.

Exception 1 allows DC power operation only where no construction work is being done.

Exception 2 allows DC power operation only where buildings do not have commercial electrical service.

Exception 3 allows DC operation only in areas of buildings that are not being altered or repaired to result in the removal of interior finishes. Where interior finishes are being removed, DC power will be required unless Exception 2 is met.

[F] 704.6.4 Smoke detection system. Smoke detectors listed in accordance with UL 268 and provided as part of the building's fire alarm system shall be an acceptable alternative to single- and multiple-station smoke alarms and shall comply with the following:

1. The fire alarm system shall comply with all applicable requirements in Section 907 of the *International Fire Code*.
2. Activation of a smoke detector in a dwelling or sleeping unit shall initiate alarm notification in the *dwelling* or *sleeping unit* in accordance with Section 907.5.2 of the *International Fire Code*.
3. Activation of a smoke detector in a *dwelling* or *sleeping unit* shall not activate alarm notification appliances outside of the *dwelling* or *sleeping unit*, provided that a

INTERNATIONAL CODE COUNCIL®
Copyright © 2018 ICC. ALL RIGHTS RESERVED. Accessed by Jim Davis (JDavis@ShakopeeMN.gov), (City of Shakopee) Order Number #101054067 on Mar 17, 2021 01:42 PM (PDT) pursuant to License Agreement with ICC. No further reproduction, no further reproductions by any third party, or distribution authorized. Single user only, copying and networking prohibited. ANY UNAUTHORIZED REPRODUCTION OR DISTRIBUTION IS A VIOLATION OF THE FEDERAL COPYRIGHT ACT AND THE LICENSE AGREEMENT, AND SUBJECT TO CIVIL AND CRIMINAL PENALTIES THEREUNDER.

101054067

supervisory signal is generated and monitored in accordance with Section 907.6.6 of the *International Fire Code*.

❖ This section specifically allows the use of an automatic smoke detection system as an alternative to smoke alarms. In the past, when this concept was proposed it was only specifically allowed through the alternative method and materials approach (see Section [A] 105.2 of the code), because in concept it provides the same level of protection. Such systems provide the same safety features necessary for occupants but are simply part of a fire alarm system. Note that if a detector activates within a sleeping or dwelling unit, the occupant notification system is not intended to activate. This is consistent with the operation of smoke alarms. Item 3 specifically requires the notification to be only to occupants of the sleeping unit or dwelling unit.

[F] 704.7 Single- and multiple-station smoke alarms. Single- and multiple-station smoke alarms shall be tested and maintained in accordance with the manufacturer's instructions. Smoke alarms that do not function shall be replaced. Smoke alarms installed in one- and two-family dwellings shall be replaced not more than 10 years from the date of manufacture marked on the unit, or shall be replaced if the date of manufacture cannot be determined.

❖ This section states that smoke alarms shall be replaced when they fail to respond to operability tests, or when they exceed 10 years from the date of manufacture, unless an earlier replacement is specified in the manufacturer's published instructions. The replacement of smoke alarms when they exceed 10 years from the date of manufacture is considered to be an operational and maintenance requirement for new and existing smoke alarms and not a construction requirement. It is the intent of this section to maintain a fully operational smoke alarm system, and the 10-year replacement criterion is a maximum equipment life span.

SECTION 705
CARBON MONOXIDE ALARMS AND DETECTION

[F] 705.1 General. Carbon monoxide alarms shall be installed in dwellings in accordance with Section 1103.9 of the *International Fire Code*, except that alarms in dwellings covered by the *International Residential Code* shall be installed in accordance with Section R315 of that code.

❖ This section correlates the requirements for maintenance of carbon monoxide alarms and detection systems in IFC Section 915.6, as referenced in Section 1103.9 of that code. NFPA 720 is the referenced standard for maintenance of these devices.

[F] 705.2 Carbon monoxide alarms and detectors. Carbon monoxide alarms and carbon monoxide detection systems shall be maintained in accordance with NFPA 720. Carbon monoxide alarms and carbon monoxide detectors that become inoperable or begin producing end-of-life signals shall be replaced.

❖ This section is simply a reference to the maintenance requirements of NFPA 720. In addition, when detectors become inoperable or start producing end-of-life signals, they are required to be replaced.

Bibliography

The following resource materials were used in the preparation of the commentary for this chapter of the code:

IBC—2018, *International Building Code*. Washington, DC: International Code Council, 2017.

IFC—2018, *International Fire Code*. Washington, DC: International Code Council, 2017.

INTERNATIONAL CODE COUNCIL®

Copyright © 2018 ICC. ALL RIGHTS RESERVED. Accessed by Jim Davis (JDavis@ShakopeeMN.gov), (City of Shakopee) Order Number #101054067 on Mar 17, 2021 01:42 PM (PDT) pursuant to License Agreement with ICC. No further reproduction, no further reproductions by any third party, or distribution authorized. Single user only, copying and networking prohibited. ANY UNAUTHORIZED REPRODUCTION OR DISTRIBUTION IS A VIOLATION OF THE FEDERAL COPYRIGHT ACT AND THE LICENSE AGREEMENT, AND SUBJECT TO CIVIL AND CRIMINAL PENALTIES THEREUNDER.

101054067

Chapter 8: Referenced Standards

General Comments

Chapter 8 contains a comprehensive list of all standards that are referenced in the code. It is organized in a manner that makes it easy to locate specific references.

This chapter lists the standards that are referenced in various sections of this document. The standards are listed herein by the promulgating agency of the standard, the standard identification, the effective date and title and the section or sections of this document that reference the standard. The application of the referenced standards shall be as specified in Section 102.7.

It is important to understand that not every document related to building design and construction is qualified to be a "referenced standard." The ICC has adopted a criterion that standards referenced in the International Codes® (I-Codes®) and standards intended for adoption into the I-Codes must meet in order to qualify as a referenced standard. The policy is summarized as follows:

- Code references: The scope and application of the standard must be clearly identified in the code text.
- Standard content: The standard must be written in mandatory language and appropriate for the subject covered. The standard shall not have the effect of requiring proprietary materials or prescribing a proprietary testing agency.
- Standard promulgation: The standard must be readily available and developed and maintained in a consensus process such as ASTM or ANSI.

The ICC Code Development Procedures, of which the standards policy is a part, are updated periodically. A copy of the latest version can be obtained from the ICC offices.

Once a standard is incorporated into the code through the code development process, it becomes an enforceable part of the code. When the code is adopted by a jurisdiction, the standard also is part of that jurisdiction's adopted code. It is for this reason that the criteria were developed. Compliance with this policy provides that documents incorporated into the code are developed through the use of a consensus process, are written in mandatory language and do not mandate the use of proprietary materials or agencies. The requirement for a standard to be developed through a consensus process is vital, as it means that the standard will be representative of the most current body of available knowledge on the subject as determined by a broad spectrum of interested or affected parties without dominance by any single interest group. A true consensus process has many attributes, including, but not limited to:

- An open process that has formal (published) procedures that allow for the consideration of all viewpoints.
- A definitive review period that allows for the standard to be updated or revised.
- A process of notification to all interested parties.
- An appeals process.

Many available documents related to plumbing system design, installation and construction, though useful, are not "standards," and are not appropriate for reference in the code. Often, these documents are developed or written with the intention of being used for regulatory purposes, and are unsuitable for use as a regulation due to extensive use of recommendations, advisory comments and nonmandatory terms. Typical examples of such documents include installation instructions, guidelines and practices.

The objective of the ICC's standards policy is to provide regulations that are clear, concise and enforceable; thus the requirement for standards to be written in mandatory language. This requirement is not intended to mean that a standard cannot contain informational or explanatory material that will aid the user of the standard in its application. When it is the desire of the standard's promulgating agency for such material to be included, however, the information must appear in a nonmandatory location, such as an annex or appendix, and be clearly identified as not being part of the standard.

Overall, standards referenced by the code must be authoritative, relevant, up to date and, most important, reasonable and enforceable. Standards that comply with ICC's standards policy fulfill these expectations.

Purpose

As a performance-oriented code, the code contains numerous references to documents that are used to regulate materials and methods of construction. The references to these documents within the code text consist of the promulgating agency's acronym, its publication designation (e.g., IBC) and a further indication that the document being referenced is the one that is listed in Chapter 8. Chapter 8 contains all of the information that is necessary to identify the specific referenced docu-

INTERNATIONAL CODE COUNCIL®
Copyright © 2018 ICC. ALL RIGHTS RESERVED. Accessed by Jim Davis (JDavis@ShakopeeMN.gov), (City of Shakopee) Order Number #101054067 on Mar 17, 2021 01:42 PM (PDT) pursuant to License Agreement with ICC. No further reproduction, no further reproductions by any third party, or distribution authorized. Single user only, copying and networking prohibited. ANY UNAUTHORIZED REPRODUCTION OR DISTRIBUTION IS A VIOLATION OF THE FEDERAL COPYRIGHT ACT AND THE LICENSE AGREEMENT, AND SUBJECT TO CIVIL AND CRIMINAL PENALTIES THEREUNDER.

101054067

ment. Included is the following information on a document's promulgating agency (see Figure 8):

- The promulgating agency (i.e., the agency's title).
- The promulgating agency's acronym.
- The promulgating agency's address.

For example, a reference to an ICC standard within the code indicates that the document is promulgated by the International Code Council® (ICC®), which is located in Washington, D.C. Chapter 8 lists the standards agencies alphabetically for ease of identification.

Chapter 8 also includes the following information on the referenced document itself (see Commentary Figure 8):

- The document's publication designation.
- The document's edition year.
- The document's title.
- Any addenda or revisions to the document known at the time of the code's publication.
- Every section of the code in which the document is referenced.

The heading designations are listed in alphabetical order. In this case, there is only one referenced in Commentary Figure 8.

Chapter 8 identifies that ICC, IBC-18 is titled the *International Building Code*®, the applicable edition (i.e., its year of publication) is 2018 and it is referenced in four specific sections of the code.

The key aspect of the manner in which standards are referenced by the code is that a specific edition of a specific standard is clearly identified. In this manner, the requirements necessary for compliance can be readily determined. The basis for code compliance is, therefore, established and available on an equal basis to the code official, contractor, designer and owner.

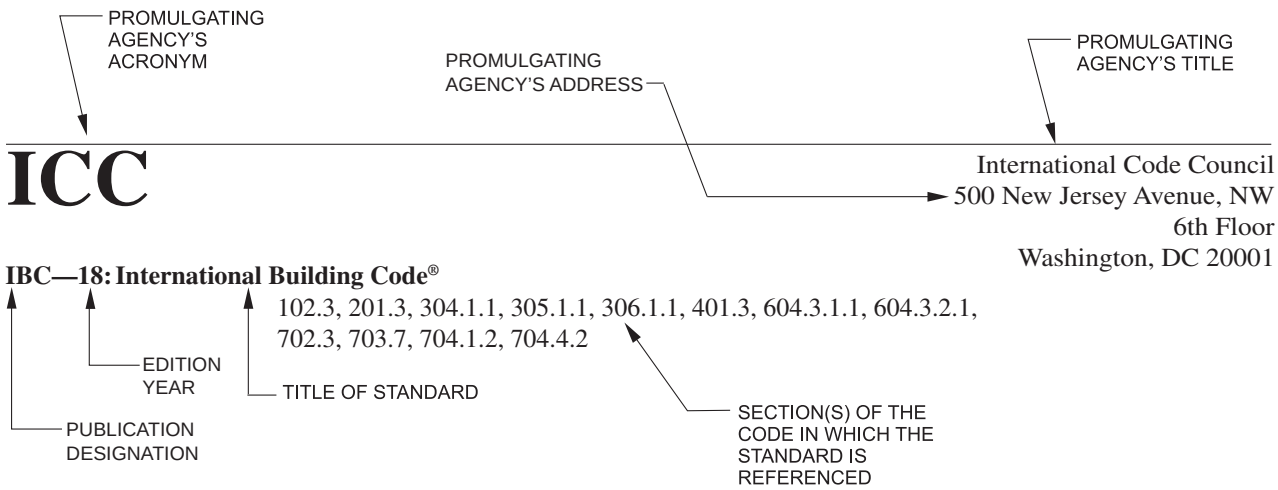

Commentary Figure 8
REFERENCED STANDARDS

INTERNATIONAL CODE COUNCIL®
Copyright © 2018 ICC. ALL RIGHTS RESERVED. Accessed by Jim Davis (JDavis@ShakopeeMN.gov), (City of Shakopee) Order Number #101054067 on Mar 17, 2021 01:42 PM (PDT) pursuant to License Agreement with ICC. No further reproduction, no further reproductions by any third party, or distribution authorized. Single user only, copying and networking prohibited. ANY UNAUTHORIZED REPRODUCTION OR DISTRIBUTION IS A VIOLATION OF THE FEDERAL COPYRIGHT ACT AND THE LICENSE AGREEMENT, AND SUBJECT TO CIVIL AND CRIMINAL PENALTIES THEREUNDER.

101054067

User note:

About this chapter: *This code contains numerous references to standards promulgated by other organizations that are used to provide requirements for materials and methods of construction. Chapter 8 contains a comprehensive list of all standards that are referenced in this code. These standards, in essence, are part of this code to the extent of the reference to the standard.*

This chapter lists the standards that are referenced in various sections of this document. The standards are listed herein by the promulgating agency of the standard, the standard identification, the effective date and title and the section or sections of this document that reference the standard. The application of the referenced standards shall be as specified in Section 102.7.

ASME

American Society of Mechanical Engineers
Two Park Avenue
New York, NY 10016-5990

ASME A17.1—2016/CSA B44—16: Safety Code for Elevators and Escalators
606.1

ASTM

ASTM International
100 Barr Harbor Drive, P.O. Box C700
West Conshohocken, PA 19428-2959

F1346—91 (2010): Performance Specifications for Safety Covers and Labeling Requirements for All Covers for Swimming Pools, Spas and Hot Tubs
303.2

ICC

International Code Council
500 New Jersey Avenue, NW
6th Floor
Washington, DC 20001

IBC—18: International Building Code®
102.3, 201.3, 304.1.1, 305.1.1, 306.1.1, 401.3, 604.3.1.1, 604.3.2.1, 702.3, 704.4.2

IECC—18: International Energy Conservation Code®
102.3

IEBC—18: International Existing Building Code®
102.3, 201.3, 304.1.1, 305.1.1, 306.1.1

IFC—18: International Fire Code®
102.3, 201.3, 604.3.1.1, 702.1, 702.2, 704.1, 704.1.2, 704.1.3, 704.3, 704.3.1, 704.4.2, 704.4.3, 704.5.1, 704.6.4, 705.1

IFGC—18: International Fuel Gas Code®
102.3, 201.3

IMC—18: International Mechanical Code®
102.3, 201.3

IPC—18: International Plumbing Code®
102.3, 201.3, 502.5, 505.1, 505.5.1, 602.2, 602.3

IRC—18: International Residential Code®
102.3, 201.3

IZC—18: International Zoning Code®
102.3, 201.3

NFPA

National Fire Protection Association
1 Batterymarch Park
Quincy, MA 02169-7471

10—17: Standard for Portable Fire Extinguishers
Table 704.2

INTERNATIONAL CODE COUNCIL®
Copyright © 2018 ICC. ALL RIGHTS RESERVED. Accessed by Jim Davis (JDavis@ShakopeeMN.gov), (City of Shakopee) Order Number #101054067 on Mar 17, 2021 01:42 PM (PDT) pursuant to License Agreement with ICC. No further reproduction, no further reproductions by any third party, or distribution authorized. Single user only, copying and networking prohibited. ANY UNAUTHORIZED REPRODUCTION OR DISTRIBUTION IS A VIOLATION OF THE FEDERAL COPYRIGHT ACT AND THE LICENSE AGREEMENT, AND SUBJECT TO CIVIL AND CRIMINAL PENALTIES THEREUNDER.

101054067

NFPA—continued

12—15: Standard on Carbon Dioxide Extinguishing Systems
Table 704.2

12A—15: Standard on Halon 1301 Fire Extinguishing Systems
Table 704.2

17—17: Standard for Dry Chemical Extinguishing Systems
Table 704.2

17A—17: Standard for Wet Chemical Extinguishing Systems
Table 704.2

25—17: Standard for the Inspection, Testing and Maintenance of Water-Based Fire Protection Systems
Table 704.2

70—17: National Electrical Code
102.3, 201.3, 604.2

72—16: National Fire Alarm and Signaling Code
Table 704.2

80—16: Standard for Fire Doors and Other Opening Protectives
703.3.3, 703.4

105—16: Standard for Smoke Door Assemblies and Other Opening Protectives
703.3.2

204—15: Standard for Smoke and Heat Venting
Table 704.2

720—15: Standard for the Installation of Carbon Monoxide (CO) Detection and Warning Equipment
[F] 705.2

750—14: Standard on Water Mist Fire Protection Systems
Table 704.2

2001—15: Standard on Clean Agent Fire Extinguishing Systems
Table 704.2

UL

Underwriters Laboratories, LLC
333 Pfingsten Road
Northbrook, IL 60062

268—09: Smoke Detectors for Fire Alarm Systems
704.6.4

INTERNATIONAL CODE COUNCIL®

Copyright © 2018 ICC. ALL RIGHTS RESERVED. Accessed by Jim Davis (JDavis@ShakopeeMN.gov), (City of Shakopee) Order Number #101054067 on Mar 17, 2021 01:42 PM (PDT) pursuant to License Agreement with ICC. No further reproduction, no further reproductions by any third party, or distribution authorized. Single user only, copying and networking prohibited. ANY UNAUTHORIZED REPRODUCTION OR DISTRIBUTION IS A VIOLATION OF THE FEDERAL COPYRIGHT ACT AND THE LICENSE AGREEMENT, AND SUBJECT TO CIVIL AND CRIMINAL PENALTIES THEREUNDER.

101054067

Appendix A: Boarding Standard

User Note:

Appendix A provides minimum specifications for boarding a structure. This can be utilized by a jurisdiction as a set of minimum requirements in order to result in consistent boarding quality. These requirements also provide a reasonable means to eliminate having to approve numerous methods or materials for the boarding and securing of a structure. It is important to note that the provisions of Appendix A are not mandatory unless specifically referenced in the adopting ordinance of the jurisdiction having authority.

The provisions contained in this appendix are not mandatory unless specifically referenced in the adopting ordinance.

A101 GENERAL

A101.1 General. Windows and doors shall be boarded in an *approved* manner to prevent entry by unauthorized persons and shall be painted to correspond to the color of the existing structure.

A102 MATERIALS

A102.1 Boarding sheet material. Boarding sheet material shall be minimum $^1/_2$-inch-thick (12.7 mm) wood structural panels complying with the *International Building Code*.

A102.2 Boarding framing material. Boarding framing material shall be minimum nominal 2-inch by 4-inch (51 mm by 102 mm) solid sawn lumber complying with the *International Building Code*.

A102.3 Boarding fasteners. Boarding fasteners shall be minimum $^3/_8$-inch-diameter (9.5 mm) carriage bolts of such a length as required to penetrate the assembly and as required to adequately attach the washers and nuts. Washers and nuts shall comply with the *International Building Code*.

A103 INSTALLATION

A103.1 Boarding installation. The boarding installation shall be in accordance with Figures A103.1(1) and A103.1(2) and Sections A103.2 through A103.5.

A103.2 Boarding sheet material. The boarding sheet material shall be cut to fit the door or window opening neatly or shall be cut to provide an equal overlap at the perimeter of the door or window.

A103.3 Windows. The window shall be opened to allow the carriage bolt to pass through or the window sash shall be removed and stored. The 2-inch by 4-inch (51 mm by 102 mm) strong back framing material shall be cut minimum 2 inches (51 mm) wider than the window opening and shall be placed on the inside of the window opening 6 inches (152 mm) minimum above the bottom and below the top of the window opening. The framing and boarding shall be predrilled. The assembly shall be aligned and the bolts, washers and nuts shall be installed and secured.

A103.4 Door walls. The door opening shall be framed with minimum 2-inch by 4-inch (51 mm by 102 mm) framing material secured at the entire perimeter and vertical members at a maximum of 24 inches (610 mm) on center. Blocking shall also be secured at a maximum of 48 inches (1219 mm) on center vertically. Boarding sheet material shall be secured with screws and nails alternating every 6 inches (152 mm) on center.

A103.5 Doors. Doors shall be secured by the same method as for windows or door openings. One door to the structure shall be available for authorized entry and shall be secured and locked in an *approved* manner.

A104 REFERENCED STANDARD

IBC—18	International Building Code	A102.1, A102.2, A102.3

INTERNATIONAL CODE COUNCIL®
Copyright © 2018 ICC. ALL RIGHTS RESERVED. Accessed by Jim Davis (JDavis@ShakopeeMN.gov), (City of Shakopee) Order Number #101054067 on Mar 17, 2021 01:42 PM (PDT) pursuant to License Agreement with ICC. No further reproduction, no further reproductions by any third party, or distribution authorized. Single user only, copying and networking prohibited. ANY UNAUTHORIZED REPRODUCTION OR DISTRIBUTION IS A VIOLATION OF THE FEDERAL COPYRIGHT ACT AND THE LICENSE AGREEMENT, AND SUBJECT TO CIVIL AND CRIMINAL PENALTIES THEREUNDER.

101054067

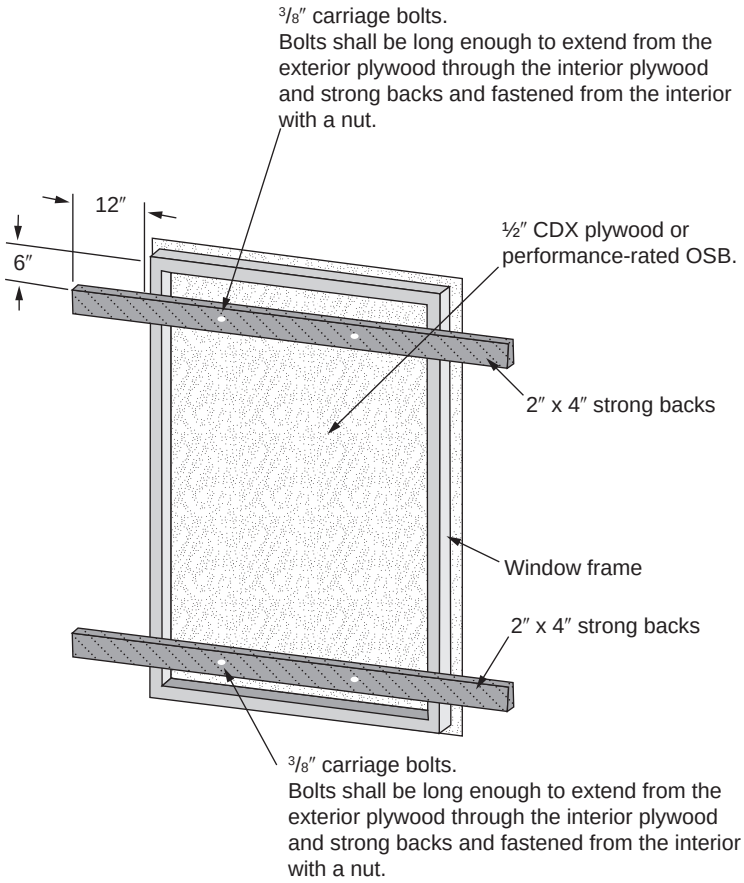

FIGURE A103.1(1)
BOARDING OF DOOR OR WINDOW

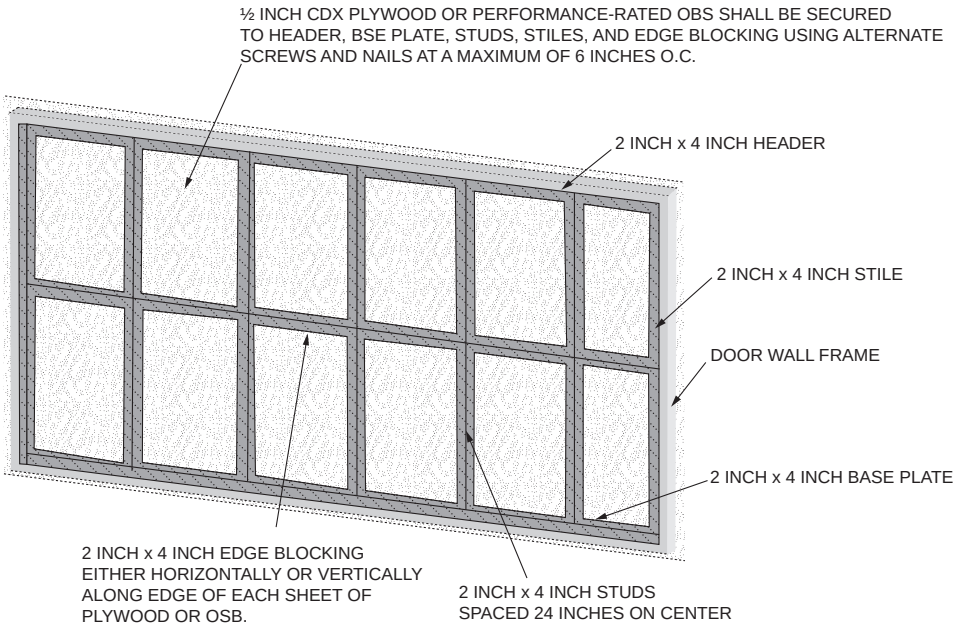

For SI: 1 inch = 25.4 mm.

FIGURE A103.1(2)
BOARDING OF DOOR WALL

INTERNATIONAL CODE COUNCIL®
Copyright © 2018 ICC. ALL RIGHTS RESERVED. Accessed by Jim Davis (JDavis@ShakopeeMN.gov), (City of Shakopee) Order Number #101054067 on Mar 17, 2021 01:42 PM (PDT) pursuant to License Agreement with ICC. No further reproduction, no further reproductions by any third party, or distribution authorized. Single user only, copying and networking prohibited. ANY UNAUTHORIZED REPRODUCTION OR DISTRIBUTION IS A VIOLATION OF THE FEDERAL COPYRIGHT ACT AND THE LICENSE AGREEMENT, AND SUBJECT TO CIVIL AND CRIMINAL PENALTIES THEREUNDER.

101054067

INDEX

A

ACCESS
Emergency egress 702
From bedrooms 404.4.2
Plumbing fixtures, access for cleaning 504.2
To public way 702.1
Toilet room as passageway 503.1
Water closet 404.4.3
ADJACENT
Privacy (hotel units, rooming units). 404.1
ADMINISTRATION
Scope 101.2
AGENT (See also OPERATOR, OWNER)
Definition. 202
AIR
Combustion air 603.5
AISLES
Minimum width 702.2
ALTERATION
Applicability of other codes. 102.3
Inspection 104.2
Prosecution. 106.3
Unlawful acts 106.1
ANCHOR
Anchored, definition 202
Architectural trim. 304.8
Signs, marquees and awnings 304.9
Unsafe conditions 304.1.1
APPEAL
Application 111.1
Board decision 111.6
Board of appeals 111.2
Court review 111.7
Disqualification 111.2.3
Financial interest 111.2.3
Hearing, emergency orders 109.6
Membership 111.2
Notice of appeal 111.1
Postponed hearing 111.5
Records 104.6
Right to appeal 111.1
Vote 111.6
APPLIANCE
Cooking 403.3, 602.2
Mechanical 603.1
APPLICABILITY
Application of references 102.9
General. 102.1
Other laws. 102.10
Referenced codes and standards. 102.7
APPROVAL
Alternatives 105.2
Authority 104.1, 105.2
Modifications. 105.1
Research reports 105.6
Used material and equipment. 105.4
APPROVED
Alternative materials, methods and equipment 105.2
Definition. 202
Energy conservation devices 603.6
Garbage storage facilities 308.3.1
Modifications. 105.1
Used materials and equipment 105.4
ARTIFICIAL
Lighting of habitable rooms. 401.3
Lighting of other spaces 402.3
AUTOMOBILE
Motor vehicles. 302.8
AWNING
Signs, marquees and awnings 304.9

B

BALCONY
Handrails and guardrails. 304.12
BASEMENT
Definition. 202
Hatchways 304.16
Windows 304.17
BATHROOM
Common bathrooms 502.3, 503.1
Hotels 502.3
Lighting 605.3
Locks. 503.1
Outlets required 605.2
Privacy 503.1
Ventilation. 403.2
BATHTUB
Dwelling units 502.1
Rooming houses. 502.2
Sewage system. 506.1
Water-heating facilities 505.4
Water system 505.1
BOARDING
Boarding standard. . . . . Appendix A

INTERNATIONAL CODE COUNCIL®
Copyright © 2018 ICC. ALL RIGHTS RESERVED. Accessed by Jim Davis (JDavis@ShakopeeMN.gov), (City of Shakopee) Order Number #101054067 on Mar 17, 2021 01:42 PM (PDT) pursuant to License Agreement with ICC. No further reproduction, no further reproductions by any third party, or distribution authorized. Single user only, copying and networking prohibited. ANY UNAUTHORIZED REPRODUCTION OR DISTRIBUTION IS A VIOLATION OF THE FEDERAL COPYRIGHT ACT AND THE LICENSE AGREEMENT, AND SUBJECT TO CIVIL AND CRIMINAL PENALTIES THEREUNDER.

101054067

BOILER
Unsafe equipment 108.1.2

C

CAPACITY
Heating facilities. 602.2, 602.3, 602.4
CAR (See AUTOMOBILE)
CARBON MONOXIDE ALARMS AND DETECTION
Installation 705.1
Maintenance 705.2
CEILING
Basement rooms 404.3
Fire-resistance ratings 703.1
Interior surfaces 305.3
Minimum height 404.3
Sleeping rooms 404.3
CHANGE, MODIFY
Application of other codes 102.3
CHIMNEY
Exterior structure 304.11
Flue 603.2, 603.3
CLEANING
Access for cleaning 504.2
Disposal of garbage. 308.3
Disposal of rubbish 308.2
Interior and exterior sanitation 308.1
Interior surfaces 305.3
Plumbing facilities, maintained 504.1
Required plumbing facilities. 502
Responsibility of persons. 305.1
Trash containers 308.3.2
Vacant structures and land 301.3
CLEARANCE
Heating facilities. 603.3
Plumbing fixtures 504.2
CLOSING
Streets 109.3
Vacant structures. 108.2
CLOTHES DRYER
Exhaust 403.5
CODE OFFICIAL
Condemnation 108.1
Demolition 110
Duties. 104
Emergency order 109
Enforcement authority 104.1
Failure to comply with demolition order 110.3
Identification. 104.3
Inspections. 104.2
Liability, relief of personal. 103.4
Membership of board of appeals 111.2
Notice of violation. 104.5, 107
Notices and orders. 107
Official records 104.6
Personal liability 103.4
Placarding 108.4
Prosecution 106.3
Removal of placard 108.4.1
Right of entry 104.3
Transfer of ownership 107.6
Vacant structures 108.2
Voting of appeals board 111.2, 111.6
COMBUSTION
Combustion air 603.5
COMPONENT SERVICEABILITY
Unsafe conditions. 306.1.1
CONDEMNATION
Closing of vacant structures. 108.2
Failure to comply 110.3
General 108.1
Notices and orders. 108.2, 108.3
Placarding 108.4
Removal of placard 108.4.1
CONFLICT
Conflict of interest 111.2.3
Violations 106.1
CONNECTION
Sewage system 506.1
Water heating. 505.4
Water system 505.1
CONSTRUCTION
Existing structures 101.2
CONTAINER
Garbage 308.3.2
Rubbish storage. 308.2.1
CONTINUOUS
Unobstructed egress 702.1
CONTROL
Rodent control 302.5, 304.5
Safety controls 603.4
Weed 302.4
COOLING
Cooling towers 304.11
CORRIDOR
Accumulation of rubbish. 308.1
Light 402.2
Lighting fixtures 605.3
Obstructions. 702.1, 702.2
Ratings maintained 703

INTERNATIONAL CODE COUNCIL®
Copyright © 2018 ICC. ALL RIGHTS RESERVED. Accessed by Jim Davis (JDavis@ShakopeeMN.gov), (City of Shakopee) Order Number #101054067 on Mar 17, 2021 01:42 PM (PDT) pursuant to License Agreement with ICC. No further reproduction, no further reproductions by any third party, or distribution authorized. Single user only, copying and networking prohibited. ANY UNAUTHORIZED REPRODUCTION OR DISTRIBUTION IS A VIOLATION OF THE FEDERAL COPYRIGHT ACT AND THE LICENSE AGREEMENT, AND SUBJECT TO CIVIL AND CRIMINAL PENALTIES THEREUNDER.

101054067

D

DAMP, DAMPNESS
Roofs 304.7
Window, door frames 304.13
DANGEROUS, HAZARDOUS
Condemnation 108.1
Demolition. 110
Electrical hazards 604.3, 604.3.1
Existing remedies 102.4
Imminent danger. 202
Unsafe equipment 108.1.2
Unsafe structures or premises 108.1.5
DECKS
Handrails and guardrails. 304.12
Maintenance 304.2, 304.10
DEMOLITION
Existing remedies 102.4
Failure to comply 110.3
General. 110
Order 110.2
Salvage materials 110.4
DETECTORS
Smoke 704
DETERIORATION
Components of systems 306.1.1
Definition. 202
Exterior structure 304.1.1
Exterior walls 304.6
DIRECT
Egress 702.1
DISPOSAL
Disposal of garbage 308.3
Disposal of rubbish 308.2
DOOR
Exit doors 702.3
Fire 703.2
Hardware 304.15
Insect screens 304.14
Interior surfaces 305.3
Locks 304.15, 702.3
Maintenance 304.13, 304.15
Weather tight 304.13
Window and door frames 304.13
DORMITORY (ROOMING HOUSE, HOTEL, MOTEL)
Locked doors 702.3
Privacy 503.1, 503.2
DRAFT STOPPING
Maintenance 703.3.1
DRAIN, DRAINAGE
Basement hatchways 304.16
Plumbing connections. 506
Storm drainage 507
DUCT
Exhaust duct 304.9
Duct systems 607
DUST
Process ventilation 403.4
DWELLING
Cleanliness 305.1, 308.1
Definition. 202
Electrical 604.1
Heating facilities 602
Required facilities 502

E

EGRESS
Aisles 702.2
Emergency escape 702.4
General 702.1
Lighting 402.2
Locked doors 702.3
Obstructions prohibited. 702.1
Stairs, porches and railings. 304.10, 305.4, 305.5, 307.1
ELECTRIC, ELECTRICAL EQUIPMENT
Abatement of hazards, fire exposure 604.3.2
Abatement of hazards, water exposure 604.3.1
Condemnation. 108.1
Electrical equipment 604.3.1.1
Facilities required 604.1
Hazards. 604.3
Installation. 605.1
Lighting fixtures. 605.3
Receptacles 604.3, 605.2
Responsibility 601.2
Service 604.2
ELEVATOR, ESCALATORS, DUMBWAITERS
Condemnation. 108.1
General 606.1
Maintenance 606.1, 606.2
EMERGENCY
Emergency escape openings 702.4
Emergency measures. 109
Emergency orders. 109.1
ENFORCEMENT
Duties and powers 104
Scope 101.2
EQUIPMENT
Alternative. 105.2
Combustion air 603.5

INTERNATIONAL CODE COUNCIL®
Copyright © 2018 ICC. ALL RIGHTS RESERVED. Accessed by Jim Davis (JDavis@ShakopeeMN.gov), (City of Shakopee) Order Number #101054067 on Mar 17, 2021 01:42 PM (PDT) pursuant to License Agreement with ICC. No further reproduction, no further reproductions by any third party, or distribution authorized. Single user only, copying and networking prohibited. ANY UNAUTHORIZED REPRODUCTION OR DISTRIBUTION IS A VIOLATION OF THE FEDERAL COPYRIGHT ACT AND THE LICENSE AGREEMENT, AND SUBJECT TO CIVIL AND CRIMINAL PENALTIES THEREUNDER.

101054067

Condemnation 108.1.2, 108.3
Electrical installation 605.1
Emergency order 109.1
Energy conservation devices 603.6
Installation 603.1
Interior structure 305.1
Placarding 108.4, 108.5
Prohibited use 108.5
Responsibility 601.2
Safety controls 603.4
Scope 101.2
Scope, mechanical and electrical 601.1
Support, definition 202
Unsafe 108.1.2
Used 105.4

EXHAUST
Clothes dryer 403.5
Exhaust ducts 304.9
Process ventilation 403.4

EXISTING
Remedies 102.4
Scope 101.2
Structural members 304.1.1, 304.4
Structures 101.3

EXTERIOR
Decorative features 304.8
Exterior structure 304
Exterior walls 304.6
Painting 304.2, 304.6
Rodent harborage 302.5, 304.5
Sanitation 304.1
Scope 301.1
Stair 304.10
Street numbers 304.3
Unsafe conditions 304.1.1
Weather tight 304.13

F

FAN
Exhaust vents 302.6

FEES, EXPENSES, COST
Closing vacant structures 108.2
Demolition 110.1, 110.3, 110.4
Extermination 309.2, 309.3, 309.4, 309.5
General 103.5
Relief from personal liability 103.4

FENCE
Accessory 302.7
Maintenance 304.2

FIRE
Blocking Maintenance 703.3.1

FIRE DEPARTMENT
Connection access 704.5.1, 704.5.2
Connections 704.5

FIRE PROTECTION SYSTEMS
Emergency impairments 704.3.1
Equipment 704.4, 704.4.1, 704.4.2
Inspection 704.1, 704.1.3, 704.2
Installation 704.1.1
Maintenance 704.1, 704.1.3, 704.2
Out of service 704.3
Records of maintenance 704.2.1
Required systems 704.1.2, 704.2.2
Smoke alarms 704.6
Smoke detections systems 704.6.4
Termination of service 704.4.3
Testing 704.1, 704.1.3, 704.2

FIRE-RESISTANCE RATINGS
Ceilings 703.5
Draft stopping 703.3.1
Fire barriers 703.3.3
Fire blocking 703.3.1
Fire partitions 703.3.3
Fire walls 703.3.3
Maintenance 703.3
Opening protective 703.4
Shafts 703.7
Smoke barriers 703.3.2
Smoke partitions 703.3.2
Unsafe conditions 703.2

FLAMMABLE LIQUID
Containers 108.1.2

FLOOR, FLOORING
Area for sleeping purposes 404.4.1
Fire-resistance ratings 703.1
Interior surfaces 305.1, 305.3
Space requirements 404.4.1, 404.6

FOOD PREPARATION
Cooking equipment 403.3
Sanitary condition 305.1, 404.7
Ventilation 403.4

FOUNDATION
Condemnation 108.1.1
Foundation walls 304.5
Unsafe conditions 304.1.1, 305.1.1

FRAME
Window and door frames 304.13

G

GAS
Energy conservation devices 603.6
Exhaust vents 302.6

INTERNATIONAL CODE COUNCIL®
Copyright © 2018 ICC. ALL RIGHTS RESERVED. Accessed by Jim Davis (JDavis@ShakopeeMN.gov), (City of Shakopee) Order Number #101054067 on Mar 17, 2021 01:42 PM (PDT) pursuant to License Agreement with ICC. No further reproduction, no further reproductions by any third party, or distribution authorized. Single user only, copying and networking prohibited. ANY UNAUTHORIZED REPRODUCTION OR DISTRIBUTION IS A VIOLATION OF THE FEDERAL COPYRIGHT ACT AND THE LICENSE AGREEMENT, AND SUBJECT TO CIVIL AND CRIMINAL PENALTIES THEREUNDER.

101054067

GLAZING
Materials 304.13.1
GRADE
Drainage 302.2, 507
GUARD
Anchorage and maintenance 304.12
Basement windows. 304.18.2
Definition. 202

H

HABITABLE
Definition. 202
Light 402
Minimum ceiling height 404.3
Minimum room width 404.2
Required plumbing facilities 502
Residential heating facilities 602.2, 602.3
Space requirements 404.4.1
Ventilation. 403
HANDRAILS AND GUARDRAILS
Handrails 304.12, 305.5, 307.1
Stairs and porches 304.10
HARDWARE
Door hardware 304.15, 702.3
Openable windows 304.13.2
HAZARDOUS (See DANGEROUS, HAZARDOUS)
HEAT, HEATING
Energy conservation devices 603.6
Fireplaces 603.1
Heating 603.1
Mechanical equipment 603.1
Required capabilities 602
Residential heating 602.2, 602.3
Supply. 602.3
Water heating facilities 505.4
Water system 505
HEIGHT
Minimum ceiling height 404.3
HOT (See HEAT, HEATING)
HOTELS, ROOMING HOUSES AND DORMITORY UNITS, MOTELS
Definition. 202
Locked doors 702.3
Required facilities 502
Toilet rooms 503
HOUSEKEEPING UNIT
Definition. 202

I

IDENTIFICATION
Code official 104.4
INFESTATION
Condemnation. 108.1.3
Definition 202
Insect and rodent 302.5, 304.14, 309.1
INSECTS
Infestation 309.1
Insect screens. 304.14
Pest elimination. 309
INSPECTIONS
General 104.2
Right of entry. 104.3
INSPECTOR
Identification 104.4
Inspections 104.2
Records. 104.6
INTENT
Code 101.3
INTERIOR
Interior structure 305
Interior surfaces 305.3
Means of egress 702
Sanitation 305.1
Unsafe conditions 305.1.1

J

JURISDICTION
Title 101.1

K

KITCHEN
Electrical outlets required 605.2
Minimum width 404.2
Prohibited use 404.4.4
Room lighting 605.3
Water heating facilities 505.4

L

LANDING
Handrails and guards 304.12, 305.5, 306.1
Maintenance 304.10, 305.4
LAUNDRY
Room lighting 605.3
Water-heating facilities 505.4

INTERNATIONAL CODE COUNCIL®
Copyright © 2018 ICC. ALL RIGHTS RESERVED. Accessed by Jim Davis (JDavis@ShakopeeMN.gov), (City of Shakopee) Order Number #101054067 on Mar 17, 2021 01:42 PM (PDT) pursuant to License Agreement with ICC. No further reproduction, no further reproductions by any third party, or distribution authorized. Single user only, copying and networking prohibited. ANY UNAUTHORIZED REPRODUCTION OR DISTRIBUTION IS A VIOLATION OF THE FEDERAL COPYRIGHT ACT AND THE LICENSE AGREEMENT, AND SUBJECT TO CIVIL AND CRIMINAL PENALTIES THEREUNDER.

101054067

LAVATORY
Hotels 502.3
Required facilities 502
Rooming houses 502.2
Sanitary drainage system 506
Water-heating facilities 505.4
Water system 505
LEASE (SELL, RENT)
Heat supplied 602.3
Salvage materials 110.4
Transfer of ownership 107.6
LIEN
Closing of vacant structures 108.2
Demolition 110.3
Failure to comply 110.3
LIGHT, LIGHTING
Common halls and stairways 402.2, 605.3
General 402
Habitable rooms 402.1
Kitchen 605.3
Laundry rooms 605.3
Luminaires 605.3
Other spaces 402.3
Responsibility 401.2
Scope 101.2
Toilet rooms 605.3
LIVING ROOM
Room area 404.4.1
LOAD, LOADING
Elevators, escalators and dumbwaiters 606.1
Handrails and guardrails 304.12, 305.5
Live load 304.4, 305.2
Stairs and porches 304.10, 305.2
Structural members 304.4, 305.2

M

MAINTENANCE
Required 102.2
MATERIAL
Alternative 105.2
Salvage 110.4
Used 105.4
MEANS OF EGRESS (See EGRESS)
MECHANICAL
Installation 603.1
Responsibility 601.2
Scope 601.1
Ventilation, general 403
Ventilation, toilet rooms 403.2
MINIMUM
Ceiling height 404.3
Room area 404.4.1
Room width 404.2
MODIFICATION
Approval 105.1
MOTEL (See HOTELS)
MOTOR VEHICLES
Inoperative 302.8
Painting 302.8

N

NATURAL
Lighting 401.3, 402
Ventilation 401.3, 403
NOTICES AND ORDERS
Appeal 111.1
Form 107.2
Method of service 107.3
Orders 107
Owner, responsible person 107.1
Penalties 107.5
Placarding of structure 108.4
Transfer of ownership 107.6
Unauthorized tampering 107.4
Vacating structure 108.2
NOXIOUS
Process ventilation 403.4
Weeds 302.4
NUISANCE
Closing of vacant structures 108.2

O

OBSTRUCTION
Light 402.1
Right of entry 104.3
OCCUPANCY (See USE)
OPENABLE
Locked doors 702.3
Windows 304.13.2, 403.1
OPENING PROTECTIVES
Closers 703.8
Door operation 703.4.3
Hold-open devices 703.4.2
Maintenance 703.4
Signs 703.4.1
Testing 703.6
OPERATOR
Definition 202
ORDER (See NOTICE)
ORDINANCE, RULE
Applicability 102
Application for appeal 111.1

INTERNATIONAL CODE COUNCIL®
Copyright © 2018 ICC. ALL RIGHTS RESERVED. Accessed by Jim Davis (JDavis@ShakopeeMN.gov), (City of Shakopee) Order Number #101054067 on Mar 17, 2021 01:42 PM (PDT) pursuant to License Agreement with ICC. No further reproduction, no further reproductions by any third party, or distribution authorized. Single user only, copying and networking prohibited. ANY UNAUTHORIZED REPRODUCTION OR DISTRIBUTION IS A VIOLATION OF THE FEDERAL COPYRIGHT ACT AND THE LICENSE AGREEMENT, AND SUBJECT TO CIVIL AND CRIMINAL PENALTIES THEREUNDER.

101054067

OUTLET
Electrical 605.2
OWNER
Closing of vacant structures 108.2
Definition 202
Demolition 110
Failure to comply 110.3
Insect and rat control 302.5, 309.2, 309.4
Notice 107.1, 108.3
Pest elimination 309.2
Placarding of structure 108.4
Responsibility 301.2
Responsibility, fire safety 701.2
Responsibility, light, ventilation 401.2
Responsibility, mechanical and electrical 601.2
Responsibility, plumbing facilities 501.2
Right of entry 104.3
Rubbish storage 308.2.1
Scope 101.2
Transfer of ownership 107.6

P

PASSAGEWAY
Common hall and stairway 402.2
Interior surfaces 305.3
Toilet rooms, direct access 503.1
PENALTY
Notices and orders 107.5
Placarding of structure 108.4
Prohibited occupancy 108.5
Removal of placard 108.4.1
Scope 101.2
Violations 106.4
PEST ELIMINATION
Condemnation 108.1
Definition 202
Insect and rodent control 302.5, 304.5, 304.14, 309.1
Pest elimination 309.1
Responsibility of owner 301.2, 309.2
Responsibility of tenant-occupant . 309.3, 309.4, 309.5
PLACARD, POST
Closing 108.2
Condemnation 108.1
Demolition 110
Emergency, notice 109.1
Notice to owner 107.1, 108.3
Placarding of structure 108.4
Prohibited use 108.5
Removal 108.4.1
PLUMBING
Clean and sanitary 504.1
Clearance 504.2
Connections 505.1
Contamination 505.2
Employee's facilities 503.3
Fixtures 504.1
Required facilities 502
Responsibility 501.2
Sanitary drainage system 506
Scope 501.1
Storm drainage 507
Supply 505.3
Water heating facilities 505.4
PORCH
Handrails 304.12
Structurally sound 304.10
PORTABLE (TEMPORARY)
Cooking equipment 603.1
PRESSURE
Water supply 505.3
PRIVATE, PRIVACY
Bathtub or shower 503.1
Occupancy limitations 404.1
Required plumbing facilities 502
Sewage system 506.1
Water closet and lavatory 503.1
Water system 505.1
PROPERTY, PREMISES
Cleanliness 304.1, 308.1
Condemnation 108
Definition 202
Demolition 110
Emergency measures 109
Exterior areas 302
Failure to comply 110.3
Grading and drainage 302.2
Pest elimination, multiple occupancy . . . 302.5, 309.4
Pest elimination, single occupancy 302.5, 309.3
Responsibility 301.2
Scope 301.1
Storm drainage 507
Vacant structures and land 301.3
PROTECTION
Basement windows 304.17
Fire protection systems 704
Signs, marquees and awnings 304.9
PUBLIC
Cleanliness 304.1, 305.1
Egress 702.1
Hallway 502.3
Sewage system 506.1
Toilet facilities 502.5, 503

INTERNATIONAL CODE COUNCIL®
Copyright © 2018 ICC. ALL RIGHTS RESERVED. Accessed by Jim Davis (JDavis@ShakopeeMN.gov), (City of Shakopee) Order Number #101054067 on Mar 17, 2021 01:42 PM (PDT) pursuant to License Agreement with ICC. No further reproduction, no further reproductions by any third party, or distribution authorized. Single user only, copying and networking prohibited. ANY UNAUTHORIZED REPRODUCTION OR DISTRIBUTION IS A VIOLATION OF THE FEDERAL COPYRIGHT ACT AND THE LICENSE AGREEMENT, AND SUBJECT TO CIVIL AND CRIMINAL PENALTIES THEREUNDER.

101054067

Vacant structures and land 301.3
Water system 505
PUBLIC WAY
Definition 202

R

RAIN (PREVENTION OF ENTRY INTO BUILDING EXTERIOR ENVELOPE)
Basement hatchways 304.16
Exterior walls 304.6
Grading and drainage 302.2
Roofs 304.7
Window and door frames 304.13
RECORD
Official records 104.6
REPAIR
Application of other codes 102.3
Chimneys 304.11
Demolition 110.1
Exterior surfaces 304.1
Intent 101.3
Maintenance 102.2
Signs, marquees and awnings 304.9
Stairs and porches 304.10
Weather tight 304.13
Workmanship 102.5
REPORTS
Test reports 105.3.2
RESIDENTIAL
Pest elimination 309
Residential heating 602.2
Scope 101.2
RESPONSIBILITY
Pest elimination 309
Fire safety 701.2
Garbage disposal 308.3
General 301.2
Mechanical and electrical 601.2
Persons 301.1
Placarding of structure 108.4
Plumbing facilities 501.2
Rubbish storage 308.2.1
Scope 101.2, 301.1
REVOKE, REMOVE
Demolition 110
Existing remedies 102.4
Removal of placard 108.4.1
Rubbish removal 308.2.1
RIGHT OF ENTRY
Duties and powers of code official 104.3
Inspections 104.2
RODENTS
Basement hatchways 304.16
Condemnation 108
Foundations 304.5
Guards for basement windows 304.17
Harborage 302.5
Insect and rodent control 309.1
Pest elimination 302.5, 309
ROOF
Exterior structure 304.1
Roofs 304.7
Storm drainage 507
ROOM
Bedroom and living room 404.4
Cooking facilities 403.3
Direct access 503.2
Habitable 402.1
Heating facilities 602
Light 402
Minimum ceiling heights 404.3
Minimum width 404.2
Overcrowding 404.5
Prohibited use 404.4.4
Temperature 602.5
Toilet 503
Ventilation 403
ROOMING HOUSES (See DORMITORY)
RUBBISH
Accumulation 308.1
Definition 202
Disposal 308.2
Garbage facilities 308.3.1
Rubbish storage 308.2.1

S

SAFETY, SAFE
Fire safety requirements 701, 702, 703, 704
Safety controls 603.4
SANITARY
Cleanliness 304.1, 305.1
Disposal of garbage 308.3
Disposal of rubbish 308.2
Exterior property areas 302.1
Exterior structure 304.1
Food preparation 404.7
Furnished by occupant 302.1
Grease interceptors 506.3
Interior surfaces 305.3
Plumbing fixtures 504.1
Required plumbing facilities 502
Scope 101.2

INTERNATIONAL CODE COUNCIL®
Copyright © 2018 ICC. ALL RIGHTS RESERVED. Accessed by Jim Davis (JDavis@ShakopeeMN.gov), (City of Shakopee) Order Number #101054067 on Mar 17, 2021 01:42 PM (PDT) pursuant to License Agreement with ICC. No further reproduction, no further reproductions by any third party, or distribution authorized. Single user only, copying and networking prohibited. ANY UNAUTHORIZED REPRODUCTION OR DISTRIBUTION IS A VIOLATION OF THE FEDERAL COPYRIGHT ACT AND THE LICENSE AGREEMENT, AND SUBJECT TO CIVIL AND CRIMINAL PENALTIES THEREUNDER.

101054067

SCREENS
Insect screens 304.14
SECURITY
Basement hatchways 304.18.3
Building 304.18
Doors 304.18.1
Vacant structures and land 301.3
Windows 304.18.2
SELF-CLOSING SCREEN DOORS
Insect screens 304.14
SEPARATION
Fire-resistance ratings 703
Privacy 404.1
Separation of units 404.1
SERVICE
Electrical 604.2
Method 107.3
Notices and orders 107.1, 108.3
Service on occupant 108.3
SEWER
General 506.1
Maintenance 506.2
SHOWER
Bathtub or shower 502.1
Rooming houses 502.2
Water-heating facilities 505.4
Water system 505
SIGN
Fire door signs 703.4.1
Signs, marquees and awnings 304.9
Unauthorized tampering 107.4
SINGLE-FAMILY DWELLING
Extermination 309
SINK
Kitchen sink 502.1
Sewage system 506
Water supply 505.3
SIZE
Efficiency unit 404.6
Habitable room, light 402
Habitable room, ventilation 403
Room area 404.4.1
SMOKE ALARMS
Group R-1 . . . . . .704.6.1.1
Groups R-2, R-3, R-4 and I-1 . . . . . .704.6.1.2
Installation near bathrooms 704.6.1.4
Installation near cooking appliances 704.6.1.3
Interconnection 704.6.2
Power source 704.6.3
Testing 704.7
Where required 704.6.1
SPACE
General, light 402
General, ventilation 403
Occupancy limitations 404
Privacy 404.1
Scope 401.1
STACK
Smoke 304.11
STAIRS
Common halls and stairways, light 402.2
Exit facilities 305.4
Exterior property areas 302.3
Handrails 304.12, 305.5
Lighting 605.3
Stairs and porches 304.10
STANDARD
Referenced 102.7
STOP WORK ORDER
Authority 112.1
Emergencies 112.3
Failure to comply 112.4
Issuance 112.2
STORAGE
Food preparation 404.7
Garbage storage facilities 308.3
Rubbish storage facilities 308.2.1
Sanitation 308.1
STRUCTURE
Accessory structures 302.7
Closing of vacant structures 108.2
Definition 202
Emergency measures 109
General, condemnation 110
General, exterior 304.1
General, interior structure 305.1
Placarding of structure 108.4
Scope 301.1
Structural members 304.4, 305.2
Vacant structures and land 301.3
SUPPLY
Combustion air 603.5
Public water system 505.1
Water-heating facilities 505.4
Water supply 505.3
Water system 505
SURFACE
Exterior surfaces 304.2, 304.6
Interior surfaces 305.3
SWIMMING
Enclosure 303.2
Safety covers 303.2
Swimming pools 303.1

INTERNATIONAL CODE COUNCIL®
Copyright © 2018 ICC. ALL RIGHTS RESERVED. Accessed by Jim Davis (JDavis@ShakopeeMN.gov), (City of Shakopee) Order Number #101054067 on Mar 17, 2021 01:42 PM (PDT) pursuant to License Agreement with ICC. No further reproduction, no further reproductions by any third party, or distribution authorized. Single user only, copying and networking prohibited. ANY UNAUTHORIZED REPRODUCTION OR DISTRIBUTION IS A VIOLATION OF THE FEDERAL COPYRIGHT ACT AND THE LICENSE AGREEMENT, AND SUBJECT TO CIVIL AND CRIMINAL PENALTIES THEREUNDER.

101054067

T

TEMPERATURE
Nonresidential structures 602.4
Residential buildings 602.2
Water-heating facilities 505.4
TENANT
Scope. 101.2
TEST, TESTING
Agency. 105.3.1
Methods 105.3.1
Reports 105.3.2
Required 105.3
TOXIC
Process ventilation. 403.4
TRASH
Rubbish and garbage 308

U

UNOBSTRUCTED
Access to public way 702.1
General, egress 702.1
UNSAFE STRUCTURES AND EQUIPMENT
Abatement methods. 108.6
Dangerous structure or premises 108.1.5
Equipment 108.1.2
Existing remedies 102.4
General, condemnation 108, 110
General, demolition 110
Notices and orders. 107, 108.3
Record 108.7
Structures 108.1.1
USE
Application of other codes 102.3
General, demolition 110
UTILITIES
Authority to disconnect 108.2.1

V

VACANT
Abatement methods. 108.6
Authority to disconnect service utilities 108.2.1
Closing of vacant structures 108.2
Emergency measure 109
Method of service 107.3, 108.3
Notice to owner or to
person responsible 107, 108.3
Placarding of structure 108.4
Record 108.7
Vacant structures and land 301.3
VAPOR
Exhaust vents 302.6
VEHICLES
Inoperative 302.8
Painting 302.8
VENT
Plumbing hazard 504.3
Exhaust vents. 302.6
Flue 603.2
VENTILATION
Clothes dryer exhaust 403.5
Combustion air 603.5
Definition 202
General, ventilation 403
Habitable rooms 403.1
Process ventilation 403.4
Recirculation 403.2, 403.4
Toilet rooms 403.2
VERMIN
Condemnation 108
Insect and rodent control 302.5, 309
VERTICAL SHAFTS
Required enclosure 703.7
VIOLATION
Condemnation 108
Enforcement. 106.2
General 106
Notice 107, 108.3
Separate offenses 106.4
Placarding of structure 108.4
Prosecution 106.3
Strict liability offense 106.3, 202
Transfer of ownership 107.6

W

WALK
Sidewalks 302.3
WALL
Accessory structures 302.7
Exterior surfaces 304.2, 304.6
Exterior walls 304.6
Foundation walls 304.5
General, fire-resistance rating 703.1
Interior surfaces 305.3
Outlets required 605.2
Temperature measurement 602.5
WASTE
Disposal of garbage 308.3
Disposal of rubbish. 308.2
Garbage storage facilities 308.3.1
WATER
Basement hatchways 304.16
Connections 506.1

INTERNATIONAL CODE COUNCIL®
Copyright © 2018 ICC. ALL RIGHTS RESERVED. Accessed by Jim Davis (JDavis@ShakopeeMN.gov), (City of Shakopee) Order Number #101054067 on Mar 17, 2021 01:42 PM (PDT) pursuant to License Agreement with ICC. No further reproduction, no further reproductions by any third party, or distribution authorized. Single user only, copying and networking prohibited. ANY UNAUTHORIZED REPRODUCTION OR DISTRIBUTION IS A VIOLATION OF THE FEDERAL COPYRIGHT ACT AND THE LICENSE AGREEMENT, AND SUBJECT TO CIVIL AND CRIMINAL PENALTIES THEREUNDER.

101054067

Contamination 505.2
General, sewage 506
General, storm drainage 507
General, water system 505
Heating 505.4
Hotels 502.3
Kitchen sink 502.1
Nonpotable water reuse 505.5, 505.5.1
Required facilities 502
Rooming houses. 502.2
Supply. 505.3
System 505
Toilet rooms 503
Water-heating facilities 505.4

WEATHER, CLIMATE
Heating facilities 602

WEEDS
Noxious weeds 302.4

WIDTH
Minimum room width 404.2

WINDOW
Emergency escape 702.4
Glazing 304.13.1
Guards for basement windows 304.17
Habitable rooms 402.1
Insect screens 304.14
Interior surface 305.3
Light 402
Openable windows 304.13.2
Toilet rooms 403.2
Ventilation. 403
Weather tight 304.13
Window and door frames 304.13

WORKMANSHIP
General. 102.5

INTERNATIONAL CODE COUNCIL®
Copyright © 2018 ICC. ALL RIGHTS RESERVED. Accessed by Jim Davis (JDavis@ShakopeeMN.gov), (City of Shakopee) Order Number #101054067 on Mar 17, 2021 01:42 PM (PDT) pursuant to License Agreement with ICC. No further reproduction, no further reproductions by any third party, or distribution authorized. Single user only, copying and networking prohibited. ANY UNAUTHORIZED REPRODUCTION OR DISTRIBUTION IS A VIOLATION OF THE FEDERAL COPYRIGHT ACT AND THE LICENSE AGREEMENT, AND SUBJECT TO CIVIL AND CRIMINAL PENALTIES THEREUNDER.

101054067

INTERNATIONAL CODE COUNCIL®

Copyright © 2018 ICC. ALL RIGHTS RESERVED. Accessed by Jim Davis (JDavis@ShakopeeMN.gov), (City of Shakopee) Order Number #101054067 on Mar 17, 2021 01:42 PM (PDT) pursuant to License Agreement with ICC. No further reproduction, no further reproductions by any third party, or distribution authorized. Single user only, copying and networking prohibited. ANY UNAUTHORIZED REPRODUCTION OR DISTRIBUTION IS A VIOLATION OF THE FEDERAL COPYRIGHT ACT AND THE LICENSE AGREEMENT, AND SUBJECT TO CIVIL AND CRIMINAL PENALTIES THEREUNDER.

101054067

ICC EVALUATION SERVICE

In Cooperation with Innovation RESEARCH LABS

Specify and Approve with CONFIDENCE

When facing new or unfamiliar materials, how do you know if they comply with building codes and standards?

- ICC-ES® Evaluation Reports are the most widely accepted and trusted technical reports for code compliance. When you specify products or materials with an ICC-ES report, you avoid delays on projects and improve your bottom line.
- ICC-ES® Reports save time and resources, and permit quick and easy access to compliance information relevant to a product to determine its code or standard compliance and installation requirements.
- ICC-ES® provides a one-stop shop for the evaluation, listing and now testing of innovative building products through our newly formed cooperation with Innovation Research Labs, a highly respected ISO 17025 accredited testing lab with over 50 years of experience.
- ICC-ES® is a subsidiary of ICC®, the publisher of the codes used throughout the U.S. and many global markets, so you can be confident in their code expertise.

ICC INTERNATIONAL CODE COUNCIL®

WWW.ICC-ES.ORG | 800-423-6587 x3877

ICC ES ANSI ACCREDITED ISO/IEC 17065 Product Certification Body #1000

18-15551

INTERNATIONAL CODE COUNCIL®

Copyright © 2018 ICC. ALL RIGHTS RESERVED. Accessed by Jim Davis (JDavis@ShakopeeMN.gov), (City of Shakopee) Order Number #101054067 on Mar 17, 2021 01:42 PM (PDT) pursuant to License Agreement with ICC. No further reproduction, no further reproductions by any third party, or distribution authorized. Single user only, copying and networking prohibited. ANY UNAUTHORIZED REPRODUCTION OR DISTRIBUTION IS A VIOLATION OF THE FEDERAL COPYRIGHT ACT AND THE LICENSE AGREEMENT, AND SUBJECT TO CIVIL AND CRIMINAL PENALTIES THEREUNDER.

Invest in Your Future

Join the ICC community and get connected now

No other building code association offers more I-Code® resources and training to help you achieve your career goals than the International Code Council® (ICC®)

Exclusive member benefits include:

- **Free I-Code Book** – New Members receive a free I-Code book or download.
- **Free Code Opinions** – Access to expert code opinions and tech assistance.
- **Earn CEUs** – Get involved in the code development process, and earn valuable CEUs for your time.
- **Exclusive access** – To 'Member News' articles in the Building Safety Journal.
- **Member Discounts** – Enjoy substantial member discounts on I-code resources, training and other products.
- **Career Center** – Post resumes and search for new job opportunities in the building industry.
- **Corporate and Governmental Members:** Your staff can receive free benefits too.*

Join now to get connected. There's an ICC Membership category that's right for you.

Visit **www.iccsafe.org/mem1** or please call **888-ICC-SAFE** (422-7233) x33804.

**Some restrictions apply. Speak with an ICC Member Services Representative for details.*

18-15615

INTERNATIONAL CODE COUNCIL®

Copyright © 2018 ICC. ALL RIGHTS RESERVED. Accessed by Jim Davis (JDavis@ShakopeeMN.gov), (City of Shakopee) Order Number #101054067 on Mar 17, 2021 01:42 PM (PDT) pursuant to License Agreement with ICC. No further reproduction, no further reproductions by any third party, or distribution authorized. Single user only, copying and networking prohibited. ANY UNAUTHORIZED REPRODUCTION OR DISTRIBUTION IS A VIOLATION OF THE FEDERAL COPYRIGHT ACT AND THE LICENSE AGREEMENT, AND SUBJECT TO CIVIL AND CRIMINAL PENALTIES THEREUNDER.

101054067

The ICC Assessment Center (formerly known as ICC Certification & Testing) provides nationally recognized credentials that demonstrate a confirmed commitment to protect public health, safety, and welfare. Raise the professionalism of your department and further your career by pursuing an ICC Certification.

ICC Certifications offer:

- Nationwide recognition
- Increased earning potential
- Career advancement
- Superior knowledge
- Validation of your expertise
- Personal and professional satisfaction

Exams are developed and maintained to the highest standards, which includes continuous peer review by national committees of experienced, practicing professionals. ICC is continually evolving exam offerings, testing options, and technology to ensure that all building and fire safety officials have access to the tools and resources needed to advance in today's fast-paced and rapidly-changing world.

Enhancing Exam Options

Effective July 2018, the Assessment Center enhanced and streamlined exam options and now offers only computer based testing (CBT) at a test site and PRONTO. We no longer offer paper/pencil exams.

Proctored Remote Online Testing Option (PRONTO)

Taking your next ICC certification exam is more convenient, more comfortable and more efficient than ever before with PRONTO.

PRONTO provides a convenient testing experience that is accessible 24 hours a day, 7 days a week, 365 days a year. Required hardware/software is minimal – you will need a webcam and microphone, as well as a reasonably recent operating system.

pronto
ICC ONLINE EXAMS

Whether testing in your office or in the comfort of your home, your ICC exam will continue to maintain its credibility while offering more convenience, allowing you to focus on achieving your professional goals. The Assessment Center continues to add exams to the PRONTO exam catalog regularly.

18-15617

Checkout all the ICC Assessment Center has to offer at iccsafe.org/certification

INTERNATIONAL CODE COUNCIL®

Copyright © 2018 ICC. ALL RIGHTS RESERVED. Accessed by Jim Davis (JDavis@ShakopeeMN.gov), (City of Shakopee) Order Number #101054067 on Mar 17, 2021 01:42 PM (PDT) pursuant to License Agreement with ICC. No further reproduction, no further reproductions by any third party, or distribution authorized. Single user only, copying and networking prohibited. ANY UNAUTHORIZED REPRODUCTION OR DISTRIBUTION IS A VIOLATION OF THE FEDERAL COPYRIGHT ACT AND THE LICENSE AGREEMENT, AND SUBJECT TO CIVIL AND CRIMINAL PENALTIES THEREUNDER.

INTERNATIONAL CODE COUNCIL®

People Helping People Build a Safer World®

Have you seen ICC's Digital Library lately?

***codes.iccsafe.org** offers convenience, choice, and comprehensive digital options*

publicACCESS

Enjoy **FREE** access to the complete text of critical construction safety provisions including:

- International Codes®
- ICC Standards and Guidelines
- State and City Codes

premiumACCESS™

In addition to viewing the complete text online, **premiumACCESS** features make it easier than ever to save time and collaborate with colleagues.

Powerful features that work for you:

- Advanced Search crosses your entire set of purchased products.
- Concurrent user functionality lets colleagues share access.
- Internal linking navigates between purchased books in your library.
- Print controls create a PDF of any section.
- Bookmarks can be added to any section or subsection.
- Highlighting with Annotation option keeps you organized.
- Color coding identifies changes.
- Tags can be added and filtered.

1-year and 3-year *premiumACCESS* subscriptions are available now for:
International Codes® | State Codes | Standards | Commentaries

Let **codes.iccsafe.org** start working for you today!

18-15151

INTERNATIONAL CODE COUNCIL®

Copyright © 2018 ICC. ALL RIGHTS RESERVED. Accessed by Jim Davis (JDavis@ShakopeeMN.gov), (City of Shakopee) Order Number #101054067 on Mar 17, 2021 01:42 PM (PDT) pursuant to License Agreement with ICC. No further reproduction, no further reproductions by any third party, or distribution authorized. Single user only, copying and networking prohibited. ANY UNAUTHORIZED REPRODUCTION OR DISTRIBUTION IS A VIOLATION OF THE FEDERAL COPYRIGHT ACT AND THE LICENSE AGREEMENT, AND SUBJECT TO CIVIL AND CRIMINAL PENALTIES THEREUNDER.